Anatolian Rover Challenge
2022 Manual

Version Information

This file is the ARC Manual v.3 released on 15.04.2022.
Written by the ARC Committee. Digitally distributed.

Changelog

The ARC Manual v.3 is the third released version. The additional information that was provided in this version of the ARC Manual were indicated with red text colors.

Information Channels and Contacts

The Anatolian Rover Challenge website is the main source of information about the event.
ARC Website: www.anatolianrover.space
ARC Mail Adress: contact@anatolianrover.space

Contact persons:

1. **Bahadır Onur Güdürü**
   ARC General Coordinator

2. **Merve Kulan**
   ARC Organization Coordinator

3. **Işık Su Yazıcı**
   ARC Rules Coordinator

Table of Contents

1. Introduction 6

2. General Information 7
- 2.1. Descriptions 7
- 2.2. Participation Conditions 7
- 2.3. Calendar 8
  - 2.3.1. Milestones 8
  - 2.3.2. Details 9
- 2.4. Transportation and Accommodation 9
- 2.5. Emergency Handling 10
- 2.6. Challenge Fee 10
- 2.7. Questions and Answers 10
- 2.8. Change in Rules and Delivery Dates 10
- 2.9. Finalists 11

3. General Rules 12
- 3.1. Rover Design Requirements 13
  - 3.1.1. Weight Limitation 13
  - 3.1.2. Size Limitation 13
  - 3.1.3. Cost Limitation 14
  - 3.1.4. Design Advice 14
  - 3.1.5. Rover Safety 14
    - 3.1.5.1. Activity Light 14
    - 3.1.5.2. Emergency 14
    - 3.1.5.3. Use of Flammables-Explosives 15
  - 3.1.6. Communication Equipment Usage 15
- 3.2. Penalty Conditions 15
- 3.3. Objection Process 16
- 3.4. Ethics 16

4. Definitions 17
- 4.1. Challenge Area 17
- 4.2. Mission Fields 17
- 4.3. Rover 17
- 4.4. Bases 17
- 4.5. Ground Stations 18
- 4.6. Ground Station Crew 19
- 4.7. Field Crew 19
- 4.8. Juries 19
- 4.9. Intervention 19
- 4.10. Rover Automation 20

4.11. Skipping **20**
4.12. Field Dimensions **21**
4.13. Coordinate System **21**
4.14. Border Violation **21**
4.15. Criteria for "Reaching Target" **21**

5. Documentation **22**
5.1. Application Form **22**
5.2. Reports **22**
5.2.1. Design Report **22**
5.2.2. Science Report **22**
5.2.3. Cost Report **23**
5.3. Video Presentation **24**

6. Background of the Missions **25**
6.1. Mars Story: Breakthrough **25**
6.2. Moon Story: Rocket Crash **25**
6.3. Earth Story: Time to Report **26**

7. Missions **27**
7.1. The Final Stage Missions **27**
7.1.1. Mission 1: Sample and Launch Mission **27**
7.1.1.1. The Mission Steps **28**
7.1.1.2. Details **28**
7.1.1.3. Bonus Scores **30**
7.1.1.4. Notes **30**
7.1.1.5. For Autonomy **30**
7.1.2. Mission 2: Autonomous Search Mission 32
7.1.2.1. The Mission Steps **32**
7.1.2.2. Details **33**
7.1.2.3. Bonus Scores **33**
7.1.2.4. Notes **33**
7.1.3. Mission 3: Rescue Mission **33**
7.1.3.1. The Mission Steps **34**
7.1.3.2. Details **35**
7.1.3.3. For Autonomy **36**
7.1.3.4. Notes 36
7.1.4. Mission 4: Presentation Mission **36**
7.1.4.1. The Mission Steps **36**
7.1.4.2. Details **36**
7.2. Side Missions **37**
7.2.1. Challenge to Shine **37**
7.2.2. Mini-Challenges **37**

8. Score Tables **40**
8.1. Design Report 40
8.2. Video Presentation 42
8.3. Grading on a Curve 43
8.4. Mission 1 (Mars Field) 43
8.5. Mission 2 (Moon Field) 46
8.6. Mission 3 (Moon Field) 47
8.7. Mission 4 (Earth Hall) 49
8.8. General Scoring for Missions 1 to 3 51

9. Technical Details **52**
9.1. Markers 52
9.2. Bluetooth Format 53
9.3. Drawings 54
9.3.1. Panel A 55
9.3.2. Panel B 57
9.3.2.1. Details: 58
9.3.3. Panel C 59
9.3.4. Panel D 60
9.3.5. Panel E 61
9.3.6. Refueling Equipment 62
9.3.6.1. Details: 62
9.3.7. Oxygen Tube 63
9.3.7.1. Details: 63
9.3.8. Repair kit 64
9.3.8.1. Details: 64
9.3.9. Payload Bay 65

1. Introduction

Anatolian Rover Challenge is an annual international “**rover**” challenge. In the scope of the challenge, the teams of students that are affiliated by academic institutions try to achieve the determined missions by their own designed "planetary exploration robots" called **rovers.** The student teams to apply for the challenge go through a design report process. After the evaluation of all reports, teams that qualify for the finals are determined, and announced to participate in the finals. The finals are held in the carefully designed challenge area. The challenge area consists of an open field with a diameter of approximately 40 meters. The area is designed to resemble the surface of a planet or a celestial body to be explored.

During the finals, the teams perform the missions in a planned order. There are four different mission scenarios and many sub-tasks to complete for each mission. The scores received from the missions are determined by the **juries** based on the ARC Manual. On the last day, the scores are summed up, the general ranking is prepared and prizes are given to the winning teams.

The ARC event aims to create an opportunity for teams to show their abilities in solving difficult engineering and scientific problems. Teams should design, manufacture and equip their **rovers** with the necessary abilities to complete all missions.

2. General Information

ARC: Anatolian Rover Challenge 2022 will be held between 22-25 July 2022 at the Istanbul Technical University, Ayazaga Campus. The challenge is organized by the **ARC Organizing Committee** (or the **ARC Committee**) which is a subcommittee of the **Space Exploration Society (UKET)** established to contribute to space studies in Turkey. The challenge, which will be hosted by **Istanbul Technical University (ITU)** this year, is supported by the **Turkish Space Agency**, **Istanbul Technical University**, **TUBITAK Space Research Institute**, and **SAHA Istanbul Defense & Aerospace Cluster Association** as the main stakeholders.

2.1. Descriptions

Supreme Board of Jury: The responsible committee for the examination and scoring of the reports and missions throughout the challenge, which is established on transparent principles, with international participation.

Organizing Committee/Organizer/The ARC Committee: The ARC Organizing Committee is a subcommittee of the Space Exploration Society (UKET). It is the committee that conducts and manages all the organizational processes of the **Anatolian Rover Challenge**.

Team: A group of students that are affiliated with an academic institution and applied for the challenge. Each team must consist of at least two members and an academic advisor.

Team Leader: The responsible person for matters related to the team and the **rover**.

Team Member: A team member must be over the age of 18 and a university student of all levels. Members can take part in only one team.

Advisor: The person with an academic title that **guides** the team.

Prohibited Substance: Substances that affect self-control, such as consuming alcohol, drugs, etc.

Finals: The on-stage challenges (explained in the **Missions** section in detail) that are held in Istanbul, Turkey. Only teams that are qualified and announced as finalists can participate in the finals. Teams that are not eligible for the finals or curious are encouraged to experience the challenge as **visitors**.

2.2. Participation Conditions

1. The application for the challenge is required to be submitted electronically using the online application system in the https://www.anatolianrover.space/apply-challenge address.
2. It is obligatory to participate in the challenge as a team, individual applications will not be accepted.
3. In case of any changes in application information, the teams must notify the **Organizing Committee**.
4. Each team is required to have a **Team Leader** and an **Advisor**, whose descriptions are given in the **General Information** section.
5. The deadlines for the reports and events are specified in the challenge calendar. The **Organizing Committee** reserves the right to change the calendar.

6. Only the team members must be the authors of all the required documents that will be submitted.
7. An academic advisor is required for all teams. The teams may have more than one academic advisor.
8. There can be more than one team from a single institute.

2.3. Calendar

2.3.1. Milestones

An up-to-date calendar of the challenge and important dates are shown in the table below.

Date	Event
15.02.2022	Publishing the ARC'22 Manual v.1
17.02.2022	Start of the Application Submission
15.03.2022	1st Revision of the ARC Manual
15.04.2022	2nd Revision of the ARC Manual
25.04.2022	Start of the Design Report Submission
20.05.2022	Challenge Application Deadline
20.05.2022	Design Report Submission Deadline
25.05.2022	Announcement of the Finalists
01.06.2022	Publication of the Challenge Area Map
01.07.2022	Publication of the Final Refinement Document
01.07.2022	Scientific Report and Cost Report Submission Deadline
20.07.2022	Challenge Registrations and Check-in Date of the Accommodation in the ITU Dormitories
21.07.2022	Challenge Registrations and Opening Ceremony
22.07.2022	Challenge Day 1
23.07.2022	Challenge Day 2
24.07.2022	Challenge Day 3

Date	Event
25.07.2022	Challenge Day 4 and Closing Ceremony
26.07.2022	Cargo Packaging and Entertainment Day
27.07.2022	Check-out Date for the Accommodation in the ITU Dormitories

2.3.2. Details

1. The deadline for applications is the same as the **Design Report** submission due. After this date, applications will be invalid and will not be considered. Teams that apply early may be given priority in the challenge day timetable.
2. Registration for the finals will be performed on-site on the stated dates.
3. On the closing day, the teams' total scores will be calculated and announced, and awards will be given to the top teams.
4. The first version of the timetable including the exact time slots for each mission will be announced by the **Organizing Committee** one week prior to the event, while the final version will be announced on the first day of the challenge.

- Each team is responsible for complying with this timetable. **The Supreme Board of Jury** reserves the right to reject any request for change in the challenge day timeline without giving any reason.

2.4. Transportation and Accommodation

Finalists should take into account the followings:

1. Every team should take into account the custom procedures of the Republic of Turkey.
2. After the challenge, teams are advised to send back their cargo on 26.07.2022.
3. Teams will be provided their meals during the days they stay on campus.
4. Teams will be assisted with urban transportation from the airport to the campus. Teams are responsible for reporting their transportation needs, if any, by 10.07.2022 latest.
5. If required, support may be provided to the teams regarding the shipping paperwork.
6. Teams will be provided with invitation letter for visiting members to ease the visa process. For more information visit https://www.mfa.gov.tr/general-information-about-turkish-visas.en.mfa.
7. The challenge will take place at Istanbul Technical University, Ayazaga Campus (34469, Maslak-Istanbul). The closest airport to the campus is Istanbul Airport (IST).

Details regarding logistics will be announced on the challenge website.

2.5. Emergency Handling

1. Necessary precautions and disaster plans have been made for the safety of the teams and the challenge area. Fire extinguishers will be available in the challenge area, campus, and dormitories for possible emergencies. In case of fire, the teams are expected to be able to take necessary actions using these extinguishers.
2. In case of any injuries, the first aid will be made by paramedics and if necessary, the injured person will be sent to the nearest hospital by an ambulance. Necessary safety precautions in the challenge area will be provided by the Republic of Turkey's security forces.

2.6. Challenge Fee

1. The participation fee for the challenge will be received only from the teams that are entitled to participate in the finals, and no fee will be charged from the teams during the application term.
2. Teams that qualify for the finals must send the challenge fee of 250 US Dollars on the dates and through the accounts that will be specified.
3. The teams that qualify for the finals will be provided with accommodation for 10 people in the dormitories on the ITU Ayazaga Campus by the **Organizing Committee**. Two meals a day during the challenge will also be free of charge.
4. Teams larger than 10 people will be able to take advantage of these opportunities for an additional fee of 25 US Dollars per person for each additional participant other than the specified 10 people.

2.7. Questions and Answers

The **Organizing Committee** will provide '**Anatolian Rover Challenge 2022 Questions and Answers**' as a part of the challenge rules. The teams are encouraged to ask questions through this section, keeping up with the updated Q&A section is recommended. The Q&A section **overrides** ARC Manual.

2.8. Change in Rules and Delivery Dates

The **Organizing Committee** reserves the right to extend the deadline for document submissions and make necessary but unavoidable corrections to the challenge regulations at any time. All changes will be announced in advance on the challenge website. Teams are obliged to follow these changes on the challenge website. Major changes in rules are stated through the versions of the manual:

- 15.03.2022 – 1st Revision of the ARC Manual
- 15.04.2022 – 2nd Revision of the ARC Manual

Therefore, by the time this document is published, **no more major changes are not planned or expected**, only visual and editorial changes might occur until the competition date to improve clarity.

2.9. Finalists

The ARC has a capacity of 20 teams. Therefore, by the time this document is posted, there can be only 20 finalist teams. This capacity may change. If it changes, this will be announced in the upcoming revisions of the ARC manual. The finalist teams will be selected by the **jury** and the organizer based on the reports submitted by the teams. The finalists will be announced on the date specified in the schedule.

3. General Rules

The general rules are listed below:

1. All the teams present in the on-site challenge will be given a certificate of participation.
2. Rewards will be given according to the ranking of the scores collected from missions.
3. The academic advisor's job is to help students plan their projects, **guide** them academically, and support them mentally and emotionally. The awards to be given at the end of the challenge are only for the team members. Advisors will not be awarded, and they will not be able to benefit from the awards won by the team.
4. Necessary measures regarding occupational health and safety have been taken within the campus. In addition, the teams are obliged to show the expected care for their surroundings and other teams while competing and to comply with these measures.
5. "Safety Specification" will be read and signed by each team before the challenge.
6. Necessary pandemic measures have been taken within the campus and around the challenge area.
    a. At least 1.5 meters of social distance rule must be followed around the campus and in the challenge area.
    b. Participants will be provided with face masks and colognes. In addition to that, there will be 'Disinfection Points' around the challenge area.
    c. Necessary pandemic measures will be taken in the dormitories for the team members staying in the dormitories.
    d. Teams must wear surgical masks covering mouth and nose unless it is stated otherwise. Those who do not comply with this rule will be fined by the laws of the Republic of Turkey.
7. During the challenge, the medical team will be in the challenge area.
8. All teams are obliged to comply with the rules specified in this specification. If non-compliance is determined by the **Organizing Committee**, the relevant situation will be brought to the attention of the **Supreme Board of Jury**. As a result of the evaluation of the **Supreme Board of Jury**, individuals or teams may be disqualified from the challenge.
9. During the entire event, no **rover** or any part of the system of the **rover** may damage or interfere with other teams' systems. Any reports of such violations will be investigated independently by the judges or organizers, and any violation of this rule may result in the team's disqualification from the challenge. The **Organizing Committee** will not be held responsible for any of the damage caused to teams' systems.
10. Teams and members are fully responsible for any damage, accident, situations, events, etc. caused by hardware-software. All the precautions and rules declared by the **Organizing Committee** must be strictly followed. Any violation of safety regulations and standards will result in the disqualification of the team from the challenge.
11. Teams will be given a site in the challenge area where they can work on their **rovers**. Each team will be provided with a gazebo (canopy tent) and a table in this area. Electricity (220V) and internet access will be available. Teams can leave their belongings here in the spaces provided by the **Organizing Committee**. Equipment other than computers will not be taken to dormitories.

a. The **Organizing Committee** is not responsible for any damage to the belongings of the teams. Teams will be given a locked locker to use in the challenge area. Teams are responsible for keeping their valuables.
b. Working areas will be open 24/7 and no collective work will be done outside this area (Dormitory etc.).

12. Teams can enter and exit the campus at any time, provided that they comply with the campus rules. General rules regarding the campus will be announced to all teams on the website.
13. In the evenings, collective events will be organized for the teams to interact with each other and get to know Turkish culture and Istanbul.
14. The use of any '**Prohibited Substance**' on campus and during the challenge is prohibited and constitutes a crime under the laws of our country. Persons/teams who use and disturb the environment will be disqualified from the challenge.
15. Team members who will stay in the dormitories are obliged to abide by the dormitory rules.
16. In case of a dispute regarding the challenge, the decision of the "**Supreme Board of Jury**" will be considered binding.
17. In case of serious violation or cheating of the rules or specifications, action will be taken.
18. Teams must comply with the directions and instructions of the **Judges/Juries/Organizing Committee**.

3.1. Rover Design Requirements

In order to participate in the challenge, the general requirements specified in this file must be met. Teams have to indicate in their technical reports that they meet these requirements. In exceptional cases where teams are unable to meet the general requirements, they should contact the ARC **Organizing Committee** before submitting the technical report. In the case of any violation in requirements, the organizer has the right to remove the team from the challenge.

3.1.1. Weight Limitation

The weight limitation applies only to **rovers** and does not include fixed antennas, computers, and other equipment. The **rover** will be weighed automatically at the start of each mission.

1. The **rover**'s weight with **installed systems** should not be more than 60 kilograms.
2. **Rover**s over 60 kilograms will receive 5% penalty points for each kilogram weighing more than 60 kilograms.
3. The total weight of the **rover** and installed mission specific hardware in all missions combined must not exceed 80 kilograms.

3.1.2. Size Limitation

The size limitation applies only to **rovers** and does not include fixed antennas, computers, and other equipment. Without any outside intervention, the **rover** can exceed the size limitation during the mission and finish the mission above the size. The missions of the challenge are designed

for a 1.5m x 1.5m x 1.5m vehicle, large-scale **rovers** might not pass the expected passages in the missions, and might not complete the missions.

3.1.3. Cost Limitation

Total cost of the rover systems cannot exceed 20000 US Dollars (see **Cost Report**).

3.1.4. Design Advice

Rover should be designed by considering the climate and environmental conditions of the region where the challenge is held. Any damage that may arise from environmental conditions is the responsibility of the relevant team. During the missions, **rovers** will work in the open field, and the race plan will be delayed in very windy, rainy, or foggy weather conditions. It is the teams' responsibility to design or maintain their vehicles and equipment in such a way that they will not be affected by environmental conditions, during or before the challenge. Organizers are not responsible for any damage that may occur in the event of unsuitable environmental conditions.

The challenge grounds will be prepared by taking the surfaces of the planets on which the scenarios take place as examples. It is recommended that **rovers** be designed to perform the missions given in ground conditions such as gravel, either loose or hardened soil, fine particle sand. There will be cratered or sloped sections in the field.

Standard European type 220-230 V 50 Hz AC F type socket will be provided to the teams at the ground stations. In addition, facilities such as tables, chairs and extension cables will be provided at the ground station. In this regard, the organizers can make additions according to the recommendations from the relevant teams.

3.1.5. Rover Safety

3.1.5.1. Activity Light

Rover should be able to show its operational status with a lamp. The lamp should have green and yellow colors. The green light should be on when remotely controlled, and the yellow light should be on during autonomous control. While there are no technical restrictions on lamp power and location, reasonable approaches should be expected from teams.

3.1.5.2. Emergency

Rovers must not cause electrical, thermal, or mechanical harm to people who might want to stop it or to the people around them. The field crew of a relevant team is responsible for this. Teams are liable for damage caused by their **rovers** and activities while on and off the mission.

1. A red emergency button with a diameter of at least 3 cm should be available on the **rover,** and this button should be kept in a visible place. Otherwise, the teams will not be allowed to

start the mission. The emergency button must stop the transmission of power to all the **rover**'s moving systems and disconnect all batteries.

2. There is no limitation on the **rover**'s cruising speed. Apart from the mission, the relevant teams must control their **rovers**, taking into account the safety of the living creatures in the challenge area.

3.1.5.3. Use of Flammables-Explosives

When teams want to use pyrotechnic systems, they must contact the **jury** before the challenge and provide the associated MSDS documents.

3.1.6. Communication Equipment Usage

Teams can communicate between the **rover** and the Station using a radio link. It is necessary for the success of the challenge missions that the communication systems of the teams cover the challenge area.

In the challenge area, teams will set up their equipment in the Station. They can place the antenna outside so that their communication equipment is next to the Station. Teams will be settled in the ground stations so the need is at least 10 meters of cable for their communication antennas. Teams will be shown a certain area near the base to put their antennas. Antenna masts cannot exceed 3 meters in height and the area might not be supportive for thin legged masts as it is composed of loose soil.

During the challenge, teams are free to choose communication bands and equipment. For this reason, planning should be done considering that the field is 40 meters in diameter. It is recommended that the communication equipment can work in the same environment as the surrounding wireless devices.

During the challenge, the equipment can be used by the law numbered 5809 of the constitution of the Republic of Turkey. For the frequency bands available for use, the table below is recommended to be examined.

https://www.btk.gov.tr/uploads/undefined/mfp-01-02-2019.pdf

It is the team's responsibility to operate the communication systems within the legal power and frequency limits.

3.2. Penalty Conditions

People or teams that do not comply with the conditions specified in the General Rules and Ethical Rules will be evaluated by the **Supreme Board of Jury**. If deemed necessary, individuals or teams are asked to defend themselves. As a result of the evaluation, penalties such as deduction of points, failure of the mission, or disqualification from the challenge may be given. The **Supreme Board of Jury** has rights to erase up to all points of the team. The result of the evaluation is announced until 25.07.2022, which is the last day of the challenge.

3.3. Objection Process

1. The pre-challenge objection process works as follows:
    a. Before the challenge, objections regarding the challenge venue or the rules must be made to the **Organizing Committee** via the website specified in writing.
    b. Objections regarding the evaluation process of the reports must be made in writing to the **Organizing Committee** via the website specified.
    c. These objections will be submitted to the **Supreme Board of Jury** by the **Organizing Committee**, and the necessary examinations will be made by the **Supreme Board of Jury**.
2. During the challenge, the objection process works as follows:
    a. Teams are allowed to object to the decisions taken by the **juries**, for review by the **Supreme Board of Jury** consisting of all **juries**.
    b. Video recordings taken by the **Organizer** during the challenge preparation and mission are used as evidence for objections.
    c. Each team has a maximum of 3 objection rights.
    d. All objections made are evaluated at the end of the day.
    e. Objections are made in writing by the team leader through the objection form on the website. Information is given about the causing event for objection, and the objection is justified in a way that does not exceed one paragraph.
    f. The **Supreme Board of Jury** will announce the results of the objection evaluation at the latest before the challenge award ceremony.
    g. Any questions during the challenge will be addressed by the relevant **jury**. Teams can not object to a third person.

3.4. Ethics

1. Any kind of inappropriate behavior will be noted by The **Organizing Committee** and related authorities will also be informed immediately if necessary.
   . These behaviors can be summarized as follows;
    a. Insulting, swearing, threatening, etc. actions against other teams, people or organizations through social media or in the challenge area during the challenge period.
    b. Physical, verbal provocation, etc. movements towards other competitors during the challenge.
    c. Behaviors that may disturb other teams in and around the dormitory.
    d. Being involved in fights in the campus or in the challenge area.
2. Language, religion, belief, political opinion, race, age, and gender discrimination will not be tolerated in the challenge area and campus, as well as behaviors and practices that may jeopardize equal opportunity.

4. Definitions

4.1. Challenge Area

The challenge takes place in two separate fields and a conference hall: Moon Field, Mars Field, Earth Hall. The Mars Story Field is home to Mission 1, the Moon Story Field is home to Missions 2 and 3, while the Earth Hall is home to Mission 4.

4.2. Mission Fields

The areas where the missions will be performed in the challenge area will be referred to as the "mission field". During the challenge period, only the field crew of the relevant team, the **rover** of the relevant team, and the **juries** can enter the mission fields and interfere with the field and the **rover**. Illuminated indicators will be placed on the **panels** that are expected to be manipulated by the **rover** in the mission fields. The reason to do that is to control the completion of the steps and to facilitate the ground station crew to receive feedback with the camera image.

Mission fields will be overhauled for the next relevant team by the **juries** at the end of each mission. **Juries** can make changes to the field to ensure equality while preparing the field.

There are two mission fields:
Mars field: Includes **Mars Base** and resembles Mars surface by its color and features.
Moon field: Includes **Moon Base** and resembles Moon surface by its color and features.

4.3. Rover

Rover is a mobile device that can operate alone, without any power connection with another system, and can be composed of various subsystems. **Rover** can only be commanded from the ground station or can move on its own (autonomous). There can be cable and similar connections between the subsystems and the **rover**. **Rover** can use these subsystems to perform missions in the challenge area.

4.4. Bases

There are two surface research base replicas in the **challenge area**, one on each **mission field**. Bases have a room for use by teams as **ground stations**.

Bases will be used as exhibition spaces within the competition area. Competing teams will control their rover within the bases during the missions. When there is no active mission, these bases will be available for visitors. They are both one story high.

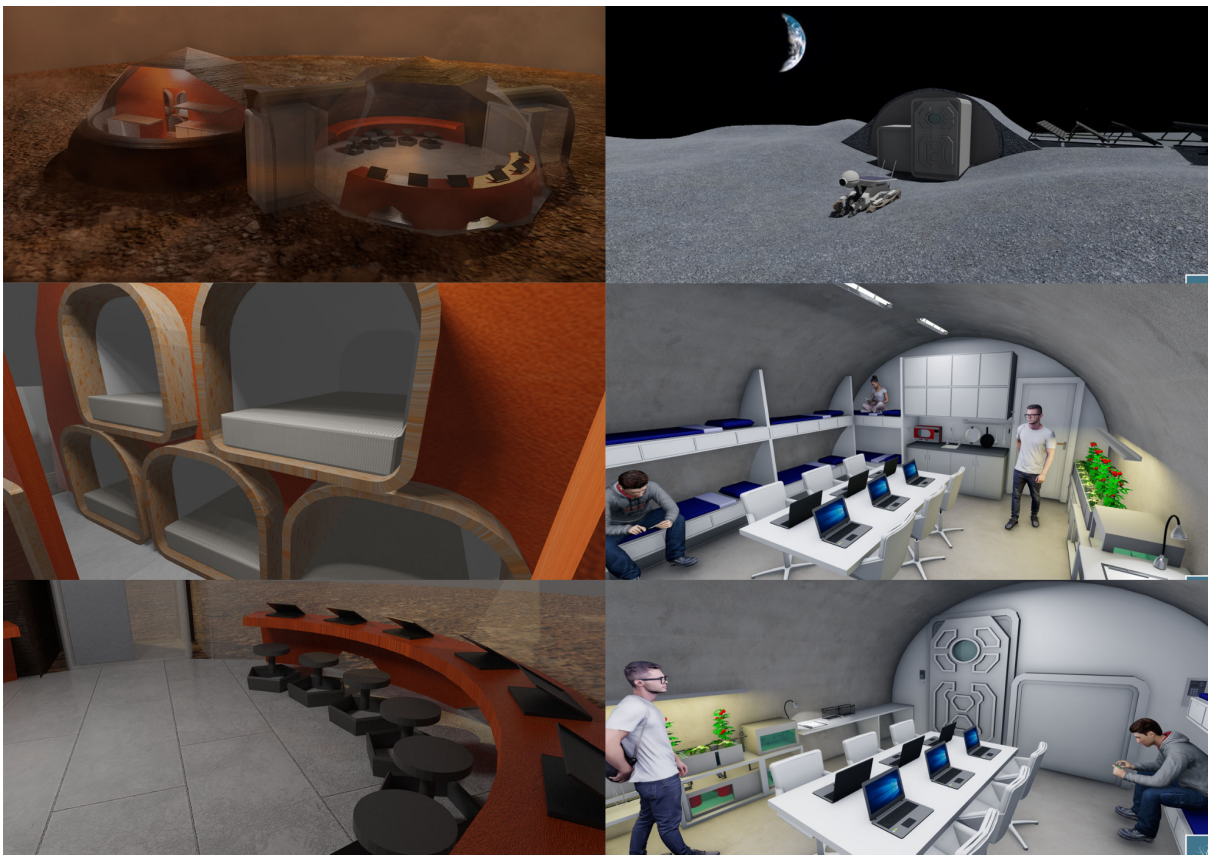

Moon base: Base in the **Moon field**.

Realistic design is made considering the Moon's conditions. The **Moon base** is located within the lunar lava tube, since it is a place suitable for living standards. The **Moon base** is designed according to the needs of astronauts. Inside the moon base, astronauts grow their vegetables and fish for food. Astronauts perform rover missions by controlling the rover from inside the moon base. They meet the electricity needs of the moon base with solar panels.

Mars base: Base in the **Mars field**.

The **Mars base** consists of two modules: one called “the habitat” and the other is called “the Mars Station” which the team members will use during the Mars challenge. The two dome structures are designed for harsh Mars conditions. To protect the astronauts from radiation, a base made from Mars soil can be used for radiation shielding. Therefore, the structures built with 3D printing technology are planned to be used in the construction of the **Mars Base**. “The habitat” is a place for astronauts where they can live their daily life.

4.5. Ground Stations

They are closed areas that are located right in the mission field and connected to the rest only by an "**airlock**". Weight and size checks are made in the **airlock** as the **rovers** begin their mission. Only the **ground station crew** of the relevant team and the **juries** can enter the ground

station. The ground station crew can only control the **rover** remotely (via remote-wireless connection). During missions, the ground station crew will not be able to see the **rover** directly. The relevant team must install the necessary equipment and antenna connections to the ground station to control the **rover** before starting the mission. Before each mission, teams will be given 15 minutes for Mission 1 to 3, and 5 minutes for Mission 4 excluding mission time, for this preparation.

4.6. Ground Station Crew

It is a crew, formed by selecting among the team members, that is the only authorized and responsible crew to remotely control the **rover** in the ground station. The ground station team cannot communicate with the outside except the **rover** and **juries** during the mission. The ground station crew starts and finishes commanding the **rover** by the **juries'** directions to accomplish the mission. During the autonomous driving stages, the ground station crew must comply with the instructions specified in the "**Rover Automation**" section and the directions of the **juries**. If ground station crew members leave the station when necessary, they cannot return to the ground station before the current mission is finished. That team member can only be a field crew or a spectator. The ground station crew may decide not to continue the mission. Until the decision is taken, they are considered to have completed the mission without losing their scores.

4.7. Field Crew

It is a crew consisting of a maximum of 4 selected members of the relevant team who can observe the **rover** during the missions. The crew is responsible for the preparation of the **rover** in the challenge area, decisions on whether to intervene when necessary, and responding to the **rover** in emergencies. The field crew should not voluntarily enter the camera view of the **rover** during the mission. In the case of doing that by mistake, they should standstill. It is forbidden for the field crew to make hand signals or speak during their mission, except in emergencies and interventions. **Juries** may dismiss field crew from the field of mission without giving any reason.

4.8. Juries

The **juries** are the most authorized officials in the challenge. It is essential to pay attention to and follow the instructions and directions of the **juries**. During the challenge, there will be at least one **jury** at each of the places like the ground station, the field, and around the challenge area. The **juries** are responsible for the organization of the challenge and guiding/assisting the relevant team.

4.9. Intervention

During the mission process, the ground station crew or one member of the field crew may decide to intervene. They are required to notify the **jury** of these decisions before implementing them. In cases where the safety of the living things in the field is at risk, as a result of a malfunction in the **rover** or the conscious control of the station officials, the **juries** may decide to intervene by pressing the **rover**'s emergency button. Mission time will not be paused when intervention begins.

During the intervention on the **rover**, there is no limitation for the number of team members on the field. When the intervention is over, the general field crew rules are applied. The remaining team members should join the spectators. Only the field crew and **juries** can approach the **rover,** and the communication between the ground station crew and the field crew is made only one way through the **juries**. For each intervention, scores are deducted from the relevant team for that mission, as indicated in the scoring table. During a mission, the **rover** can be interfered with at most 3 times. When the 4th intervention is performed, it is assumed that the team has decided not to continue the mission. During the intervention, changes that will critically affect the **rover**'s functionality or relocation of the **rover** in such a way as to gain an unfair advantage in mission steps may be rejected by the **jury**'s decision.

4.10. Rover Automation

It is possible to perform certain mission steps autonomously. By performing these mission steps, teams can stand out with their **rover**'s autonomy abilities. For a mission step to be considered autonomous, the ground station crew must inform the **jury** that they will make this step autonomous before starting the relevant mission step. If information is not given to the **juries** before the next mission step, the team can not get bonus scores. Teams should not move their vehicle after they finish the mission step prior to the upcoming step that will be done autonomously. The last move that the **rover** does, must not contribute to the upcoming step. If a team violates this rule, their next mission step will not be considered autonomous, thus they can not get bonus scores.

The teams should not arrange the position of the **rover** to get an advantage for the autonomous movement. If such an arrangement is detected by the **juries**, the **juries** have the right to not give scores for this attempt. After the team submits the request to do the next mission step autonomously to the **jury**, they must switch their vehicles to autonomous activity mode and move a reasonable distance away from the control equipment. The **rover** should terminate the autonomous mode and automatically switch to the remote control mode after the completion of the autonomous mission step. The autonomous activity can only be attempted once for each mission step.

Exclusive to Mission 2 only, autonomous events are entitled to unlimited replays in exchange for a point deduction for each mission step. See the scoreboard for details.

4.11. Skipping

Teams can skip the steps they want by informing the **jury**. They are not penalized by time or scores for the steps they skip; in case of skipping, mission time will not be paused. If a team does not use their right to skip, they must take each mission step in order, without skipping. In case of a skip, the **jury** can make the necessary changes on the field so that the next mission steps are not adversely affected. While the **jury** makes the necessary changes, it is forbidden to touch or intervene in the vehicle by any team member, and it is going to be considered intervention unless specified in the rules.

4.12. Field Dimensions

Mars field is 36 meters in diameter and Moon field is 40 meters in diameter, both sites have a circle shape. Coordinates of the center point of the fields will be elaborated in the **Final Refinement** document.

4.13. Coordinate System

WGS-84 coordinate system and (Lat: dd.dd., Long: dd.dd.) format will be used when locations are given or requested. Ex: (41.100276, 29.020975).

4.14. Border Violation

If the **rover** goes off-site, the intervention rules apply and the field crew brings the **rover** back into the field.

4.15. Criteria for "Reaching Target"

Measurements will be used to score points in mission steps that include expressions such as "goes/returns near the target". The distance between the outer surface of the target object and the **rover**'s closest point to this surface is measured, if it is less than the asked distance (this distance is 2 meters unless otherwise stated), the **rover** is considered to **approach** or **arrive**. For example, to **go near/reach** the ground station, it is accepted that there is a part of the **rover** within 2 meters from the outer surface of the ground station. Mission descriptions can specify a length to use with these criteria.

5. Documentation

5.1. Application Form

Every team must complete the challenge application form on the official ARC website. Teams must provide team information that includes "team name", "list of the team members", and "the contact information of the team leader and the team advisor" to the Organizer Committee. Teams that do not present the complete team information before the design report submission due, will not be allowed to participate in the challenge.

5.2. Reports

5.2.1. Design Report

To become a finalist and participate in the challenge, the candidate teams must report their work and electronically send the report together with the video they prepared, as specified on the challenge website, within the dates specified in the challenge calendar. The Design Report will be uploaded for public view after finalists are announced. The report must be prepared using the given template in the ARC website. Expected contents and scoring parameters are stated in the **Score Tables** section. This score combined with the video presentation score to be used for ranking the teams to select finalists.

5.2.2. Science Report

The Mars field will be designed based on the Eberswalde Crater (23.835°S, 326.381°E) and Ceraunius Tholus (24.015° N, 97.112° W). From the given Mars coordinates, a scientific question should be determined to be investigated. This hypothesis should be explained in the science report. To test the hypothesis, a landing point on the given challenge area sketch should be specified. This landing point is the position where the relevant team's **rover** will start Mission 1 during the challenge. While determining this starting point, two essential points should be considered. The landing point should be coherent with the scientific hypothesis as well as it should be a suitable terrain for the **rover** to drive.

The **Mars field** sketch made from the given coordinates is shown below. It should be noted that the maximum depth or height of the structures in the area can reach 2 meters, and the angle between the structures and the ground level can be 30 degrees at most.

The report should also include which experiments were selected to check the scientific hypothesis that was determined. These experiments should be important in terms of checking the scientific hypothesis. Randomized experiments that do not contribute to the scientific hypothesis will not yield scores.

In this report, teams should indicate which scientific hypothesis they will test at the **designated area**, what kind of sample they aim to collect, what experiments they plan to perform on the sample, and what they plan to find as a result of these experiments. The hypothesis planned in

the science report should be taken into account during the challenge. The points of Mission 4 will be affected by the **Science Report**. Following a different hypothesis than the one stated in this report during the challenge will result in a score break.

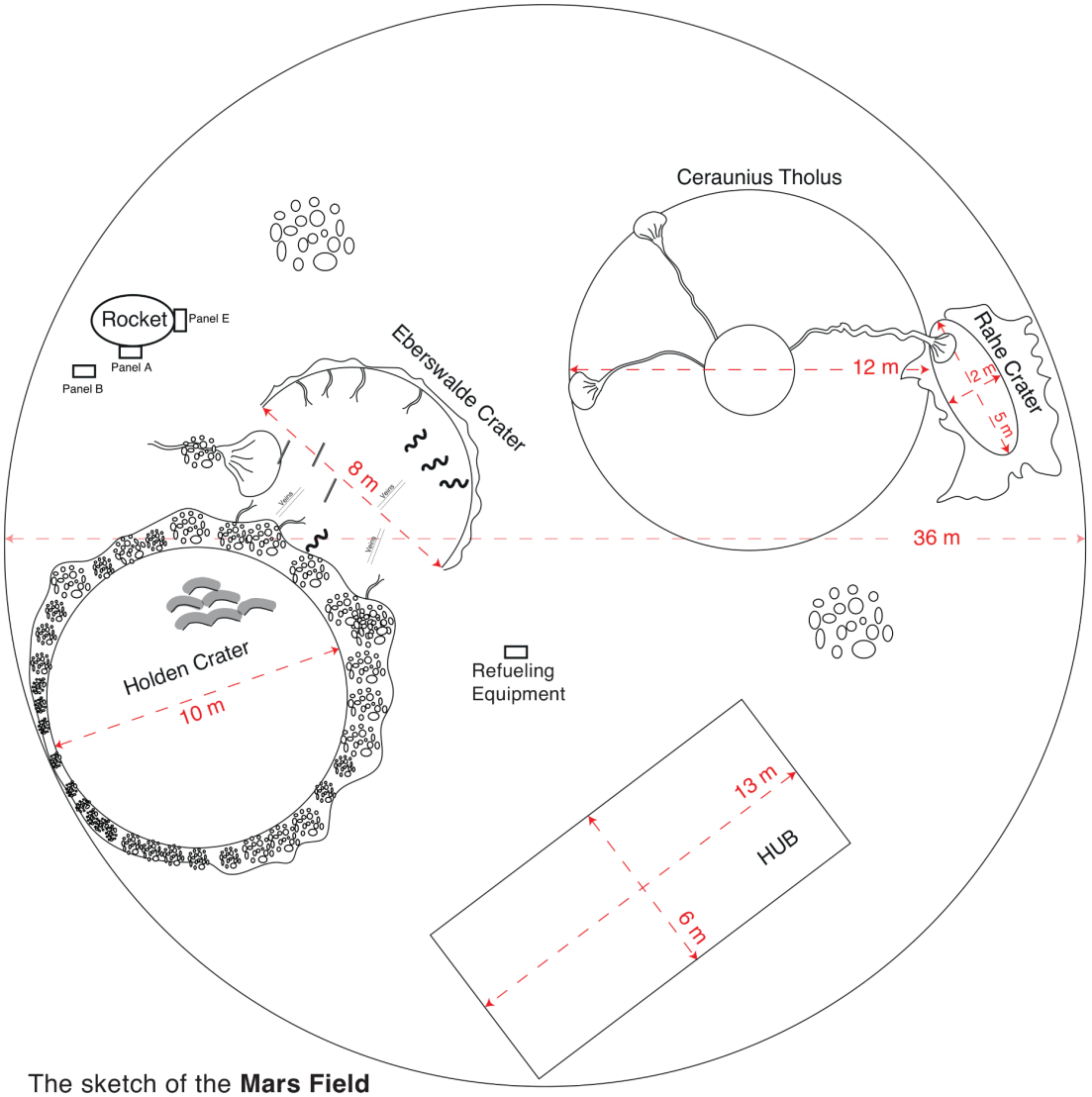

The sketch of the **Mars Field**

5.2.3. Cost Report

Teams are obliged to write a report on the cost of their rover. Total cost of the rovers cannot exceed 20000 US Dollars. The cost report template has been shared with teams on our website. All the details on the template should be fulfilled by the teams, and there should be at least 30 expense items of the rover. All the provided information must be provable with official documents on the challenge day. The financial report is mandatory to participate in the final stage of the competition. In addition, the reports will be scored and the team with the best report will be awarded.

5.3. Video Presentation

Participating teams should prepare a video in which they explain their readiness for the challenge. The video link must be uploaded to the website of the challenge together with the report, at the latest on the report submission date. The video must be shared by the participating team on a constantly accessible service (YouTube is recommended) without any access restrictions. The purpose of the video is to show the team and the **rover**'s compliance with the challenge regulations and how ready they are to obtain scores from the missions. The uploaded videos will be scored by the **jury** according to the criteria stated below. The video will be scored by the first 10 minutes. The suggestion of the ARC Organization Committee for the content duration is 6 minutes. Recommended content in the video and scoring is stated in the **Score Tables** section.

6. Background of the Missions

6.1. Mars Story: Breakthrough

Observation satellites discovered a promising location on Mars. That location should be suitable for landing as well. Therefore, scientists and engineers should select a convenient location from the satellite imagery. Considering them, they select the landing point, and land!

After the landing, the landing point should be investigated and soil samples should be collected. Collected samples must be taken to the human base on Mars. The **astronauts** will examine the samples in the laboratory at the base. Then, the samples should be sent to the Earth.

Meanwhile, the connection between the research team on Mars and the Earth has been lost because of an equipment failure due to a solar storm! To communicate with Earth, the team must send the **rocket** before they miss the launch window. In case this is the only chance for these **astronauts** to transfer their experience to the Earth, their samples and the findings must be placed into the **rocket** before the launch! Therefore, the **astronauts** must be quick at the laboratory. For the **rocket** that will be launched soon, there are tasks to be done. In order to launch the **rocket**, samples should be placed, the **rocket** needs to be refueled, and the launch preparations should be finalized.

6.2. Moon Story: Rocket Crash

The **rocket**, which was carrying **astronauts** to the Moon Station on the Moon, had a sensor problem, and crashed onto the ground. This accident caused an explosion, and it became a huge disaster for the **astronauts**. The **rover** will be used to save **astronauts**. **Astronaut**s’ life-support systems lose oxygen due to a hole in the suit. The **rover** should help **astronauts** to save their time and lives.

The **rover** knows the position of the wreck. Due to the shrapnel fragments scattered around after the explosion, the video transmitter in the Moon Station malfunctioned. Therefore, the **rover** is all alone. The **rover** autonomously arrives at the **rocket**'s landing point and searches the area autonomously to find the **astronauts**. After locating the **astronauts**, the **rover** must access the health status by communicating with the spacesuit. The second **astronaut** rolled into the nearby crater. The **rover** must race against time to find the **astronaut**. After the **rover** arrived at the Moon Station, the antenna was able to be repaired, and the **rover**'s cameras were usable. One of the **astronauts** is still in critical condition. The survivor **astronaut** must save time by delivering the oxygen tube with the help of the **rover**! To repair the hole in the **astronaut**'s suit, the necessary repair kit must be searched for in the wreckage of the **rocket** and the **astronaut**'s life must be saved by delivering this kit to the **astronaut**.

6.3. Earth Story: Time to Report

The **astronauts**, who had numerous challenges due to the solar storm, are finally back home! Now, it is time for them to report their adventures. They should give a presentation. This presentation should include the details of their missions as well as the outcomes of their scientific research.

7. Missions

The ARC missions are divided into two main groups: "The final stage missions" and "The side missions". The final stage missions are mandatory for all finalist teams.

7.1. The Final Stage Missions

Each finalist team will participate in 4 different missions. These missions will test the team's knowledge and the rover's capabilities at completing various tasks. The finalists will be scored based on their performance in the missions. The teams will try to collect the maximum overall points.

The mission sections include mission steps, details, bonus scores, and if it exists, notes for autonomous parts. "The Mission Steps" briefly introduces each task. Teams must check the respectively labeled step in the "Details" section to better understand the relevant mission step. The "Bonus Scores" section explains the optional tasks for the team to gather extra points. If it is required to share extra information about the mission, it should be indicated under the "Notes" section.

7.1.1. Mission 1: Sample and Launch Mission

Time Limit: 80 min
Mission Field: Mars Field

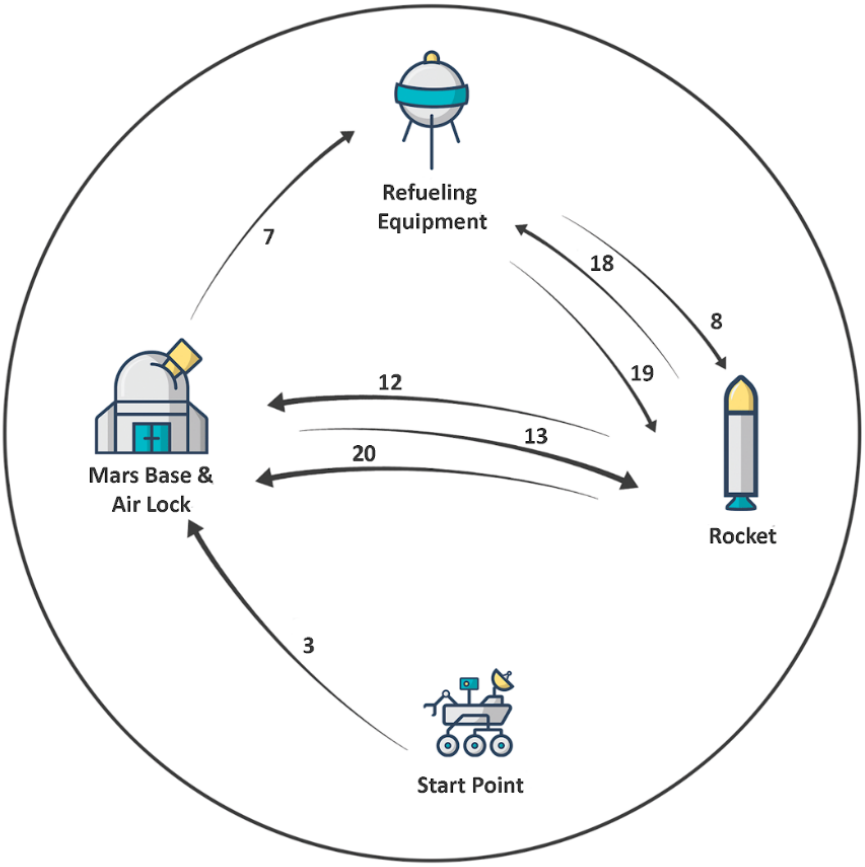

7.1.1.1. The Mission Steps

1. The mission starts from the **designated area.**
2. The area is surveyed and the soil samples are collected.
   During the sample collection process,
   a. panoramic photographs of the area
   b. photographs of the sampling site
   c. the stratigraphic photographs of the area
   d. sensor measurements should be taken.
3. The **rover** navigates to the **Mars Base.**
4. After reaching the **Mars Base**, the **rover** enters the base through the **airlock.**
5. The **rover** is prepared by **astronauts** for the next part of the mission. Experiments are started on the samples submitted by the **juries**.
6. The **rover** is in the **airlock**.
7. The **rover** is moved near the **refueling equipment**.
8. The **refueling equipment** is transported to the **rocket**.
9. The **pipe** of the **refueling equipment** is attached to the **rocket**.
10. The **valve** on the **refueling equipment** is opened.
11. **Panel A** is manipulated by reading the value of the indicator.
12. The **Sample box** and the **USB stick** are taken from the **Mars Base** by the rover.
13. The **rover** returns to the **rocket.**
14. The **sample box** is loaded into the **rocket.**
15. The **USB stick** is plugged in and out.
16. The **valve** is closed.
17. The **pipe** is removed and placed on the trailer.
18. The **refueling equipment** is moved back.
19. The **rocket** countdown is started by manipulating panel **B.**
20. The **rover** goes to the **airlock.**

7.1.1.2. Details

1. The **rover** starts the mission in the **designated area**, which is described in detail by the team in the **science report**. The **designated area** is shown to the field officials by the **jury**. The objectives given by the **jury** must be followed during the placement process. It should clearly be explained in the **presentation mission** why this region was chosen for the test and what types of elements were considered, i.e. vitality, aquatic or geological. It is important to conduct reconnaissance, consistent with the purpose outlined in the **science report.**
2. The soil samples are collected from the location deemed appropriate by the team. The sample must be taken from a depth of at least 5 cm, with a minimum amount of 10 grams. From the moment the sample is taken, it must be stored in an insulated container that will not be exposed to environmental effects to avoid contamination.
   After landing, a 360° cylindrical or spherical panoramic photograph of the area is taken. At this stage, teams can collect visual data to support their thesis.
   The location where the sample is taken should be photographed with a scale.
   It is necessary to explain the age relations of the geological units with each other by

photographing them in scale. The age relationship of the unit from which the sample was taken with the peripheral units is expected to be specified in Mission 4 when the ***astronauts*** *return to Earth.*

For example, coordinate, time, and date information can be obtained in the area where the sample is collected; humidity and temperature measurements can be taken. The data obtained from the sensors and the photographs obtained at this stage will be saved on the ***USB stick*** *that will be given in the continuation of the mission and should be explained in mission 4.*

3. The **rover** goes to the location of the **Mars Base** to deliver the sample and be prepared for the next phase of the mission.
4. The **rover,** together with the collected scientific sample, enters the **airlock**. The airlock complies with the size standards specified in the general rules.

   The inner door is opened when the **astronauts** at the **Mars Base** complete the passage from the **airlock,** as demonstrated by the judges to the team members before the mission. If the **rover** fails to enter the airlock (see "**Skipping**"), the team will not gain any score on this phase and the **rover** will be allowed to be moved to the **Mars Base** by team members. The team will then proceed to the next step.
5. Manual intervention by station attendants and field attendants within the **Mars Base** is unlimited. The **rover** can be prepared for the following steps of the mission so that it can interact with the **panels**. No extra time is given for this stage, the term of office continues. It is not necessary to make adjustments to the **rover**; teams can continue the mission with their **rover** in the same configuration if desired.

   Upon the arrival of the **rover** at the **Mars Base**, the teams receive a sample from the **juries**. This sample is specially prepared and is related to the team's hypotheses. Team members perform experiments on this sample to test their hypotheses. The team of the **Mars Base** begins to prepare the sample collected from the field, in a suitable container that will prevent it from being exposed to external influences.
6. Meanwhile, the mission continues for the **rover**. The **rover** is placed in the **airlock** after the procedure. The **airlock** is adjusted as the judges insructed the teams before the mission. This step cannot be skipped.
7. The **rover** exiting the **airlock** goes to the location of the **refueling equipment**. For details of **refueling equipment** see the related page in the **Technical Details** section.
8. The **rover** tows the **refueling equipment** to the **rocket**.
9. The **pipe** of the **refueling equipment** is attached to the corresponding area of **panel E on the rocket**. For details of **panel E,** see the related page in the **Technical Details** section.
10. The **fuel valve on the refueling equipment** is opened by turning it.
11. The pump is turned on by the right combination of buttons on **panel A**. The right combination of the buttons will be provided to the teams in the info area of the panel. The info area will contain a 5cmx5cm label which consists of the right combination by text and as a format of QR code. This combination will be decided randomly on the challenge day and vary for every team. For more details on **panel A** see the related page in the **Technical Details** section.
12. The **rover** returns to the **Mars Base**. The **USB stick** and the sample (the sample which is collected from the field by the **rover**, packaged to prevent exposure to environmental effects)

are left in the **airlock** or loaded on the rover. The **USB stick** and the **sample box** are then loaded into the rocket.

13. The **rover** returns to the **rocket.**
14. The **payload bay** is opened. The **scientific sample box** is placed in the payload section of the **rocket** and the **payload bay** is closed. See the related page in the **Technical Details** section for details of the **payload bay**.
15. The **USB stick** is inserted into the USB port on panel **A,** and after transferring the information (waiting for 30 seconds), it is removed from the **panel.**
16. The **fuel valve** is closed by turning it.
17. The **pipe** of the **refueling equipment** is detached from the **rocket panel** and placed on the trailer so that it does not drag on the ground.
18. The **rover** tows the **refueling equipment** back to roughly the original location.
19. The **rover** goes to **panel B** and starts the **rocket**'s engines through the **panel**. Firstly, all of the switches(s1-s4) on **panel B** are turned on. Then, P1 and P2 switches are turned in the right amount according to the information on the info area of **panel B**. In the third step, big knife switch is turned on to start the countdown. See the related page in the **Technical Details** section for details of **panel B**.
20. The **rover** completes the mission by entering the **airlock.**

7.1.1.3. Bonus Scores

1. After the first sample is taken, each extra sample collected at a distance of at least 0.5 meters from each other, up to a maximum of five, will earn bonus scores. All samples must comply with the sampling standard (see Scoreboard).
2. Every extra sensor measurement *(For example wind speed, radiation, pH measurement) used other than the specified sensors, which will support the scientific mesh, brings bonus scores. The reasons for which the sensor was added should be explained in Mission 4 when the **astronauts** return to Earth.*

7.1.1.4. Notes

Italicized items are scored in Mission 4 but should be fulfilled in this mission. Outputs from these items will be explained in the Mission 4 score table.

7.1.1.5. For Autonomy

1. GPS coordinates of the **start point**, **Mars Base**, refueling equipment, panels, and the **rocket** will be shared with teams before the challenge.
2. There are specific markers on the wall of the **Mars Base** to **guide** the **rover** in docking maneuver. Relevant markers are in the Technical Details section.
3. The trailer and refueling equipment will be constructed in accordance with autonomy.

4. There is a marker on the **rocket**, and the location of the place where the pipe is attached according to this marker will be shared with teams via technical blueprint.
5. There is a marker on the trailer, and the location of the valve according to this marker will be shared with team**s via technical blueprint.** Also, the color of the valve will be distinct from the rest of the trailer.
6. There is a marker on the panel, and the location of things on the panel according to this marker will be shared with teams via technical blueprint. Also, the color of all things on the panel will be distinct from the rest of the panel.
7. Teams will be allowed to work with the equipment on the field the day before the challenge.

7.1.2. Mission 2: Autonomous Search Mission

Time Limit: 30 minutes
Mission Field: Moon Field

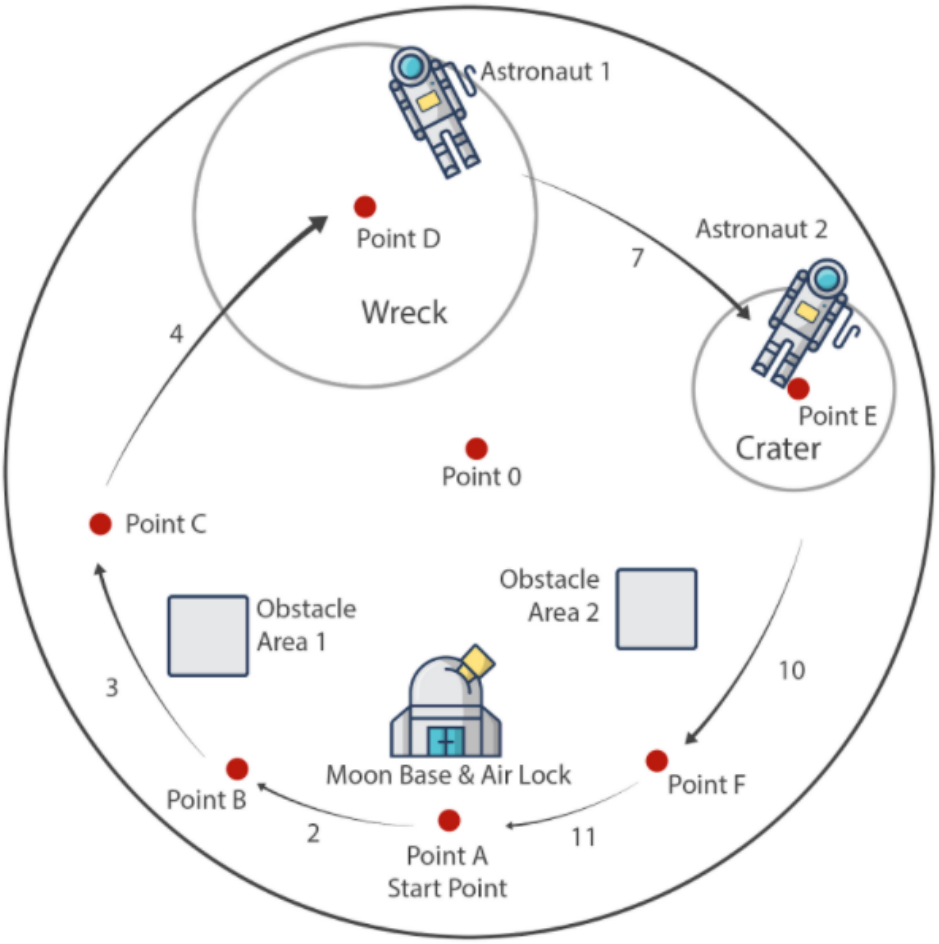

7.1.2.1. The Mission Steps

1. The mission starts in the **airlock** of the **Moon Base**.
2. The **rover** goes on the clear road.
3. The **rover** navigates around the first obstacle.
4. The **rover** reaches the wreck field.
5. The first **astronaut** is detected and the **rover** navigates to it.
6. The **astronaut's** picture is taken. The name and the health condition data of the **astronaut** are accessed. All of the gathered data is sent to the **Moon Base**.
7. The second **astronaut** is detected and the **rover** navigates to it.
8. The **astronaut's** picture is taken. The **rover** accesses the name and the health condition data of the **astronaut**. All of the gathered data is sent to the **Moon Base**.
9. The **rover** continues navigating on the path to arrive back at the **Moon Base.**
10. The **rover** navigates around the second obstacle.
11. The **rover** arrives back to the **airlock** of the **Moon Base**.

7.1.2.2. Details

1. Before starting the mission; since the manual control of the **rover** violates the rules, the **jury** validates the autonomy of the **rover**. The **jury** has the authority to perform the necessary checks in case of suspicion that the **rover** is being controlled manually. After the validation, the **rover** is placed in the **airlock** by the team members. Point A, in the location list, indicates the location of the **Moon Base** and the **airlock.** The list of the locations will be delivered to the relevant teams before the mission.
2. Point B, in the location list, stands for the end of the clear road's location.
3. The obstacle stands between the end of the clear road (point B) and point C.
4. The radius of the wreck field is 8 meters. Point D is the center of this field. There is the first **astronaut** in the wreck field. There are also pieces of shrapnel that are no larger than 15 centimeters high in this area, including sharp edges and soft materials.
5. The **astronaut** is a plastic mannequin that carries markers. Relevant markers are in the **Technical Details**. **Astronauts** can be detected using these markers. The **rover** must navigate to the first **astronaut** and stop next to the first **astronaut** to be detected. A penalty will be applied if the **rover** touches the **astronaut.**
6. The **rover** must take a photograph that includes the **astronaut**'s head in the frame. The **rover** takes data from the Bluetooth transmitter of the **astronaut**'s spacesuit without pairing to the Bluetooth transmitter. The data can be read via the device name. The bluetooth format is in the **Technical Details**. The **rover** sends all the gathered **astronaut**'s image, name and health condition data to the **Moon Base.**
    a. If the data cannot be sent to the **Moon Base**, no scores can be obtained from this step.
7. It is known that the other **astronaut** fell into the crater in the field. Point E indicates the center of the crater. The radius of the crater is 5 meters. The crater's rim slope is about 30 degrees. After the **rover** detects the **astronaut**, it is expected that the **rover** navigates and stops next to the **astronaut**.
8. The **rover** applies the same procedure in the "Detail 6" for the second **astronaut** as well.
9. The **rover** traverses out of the crater to reach the **Moon Base**.
10. The **rover** passes around the obstacle to reach point F shown in the map.
11. When the **rover** navigates to point A from point F, it is expected that the **rover** is placed into the **airlock**. There are markers on the wall of the **Moon Base** to **guide** the **rover** in docking maneuver. Relevant markers are in the **Technical Details.**

7.1.2.3. Bonus Scores

Teams will obtain bonus scores for doing all steps of the mission in a single attempt.

7.1.2.4. Notes

The radius of the mission field is 20 meters. Point "0" is the center of the field.

7.1.3. Mission 3: Rescue Mission

Mission Field: Moon Field

Mission duration: 30 minutes

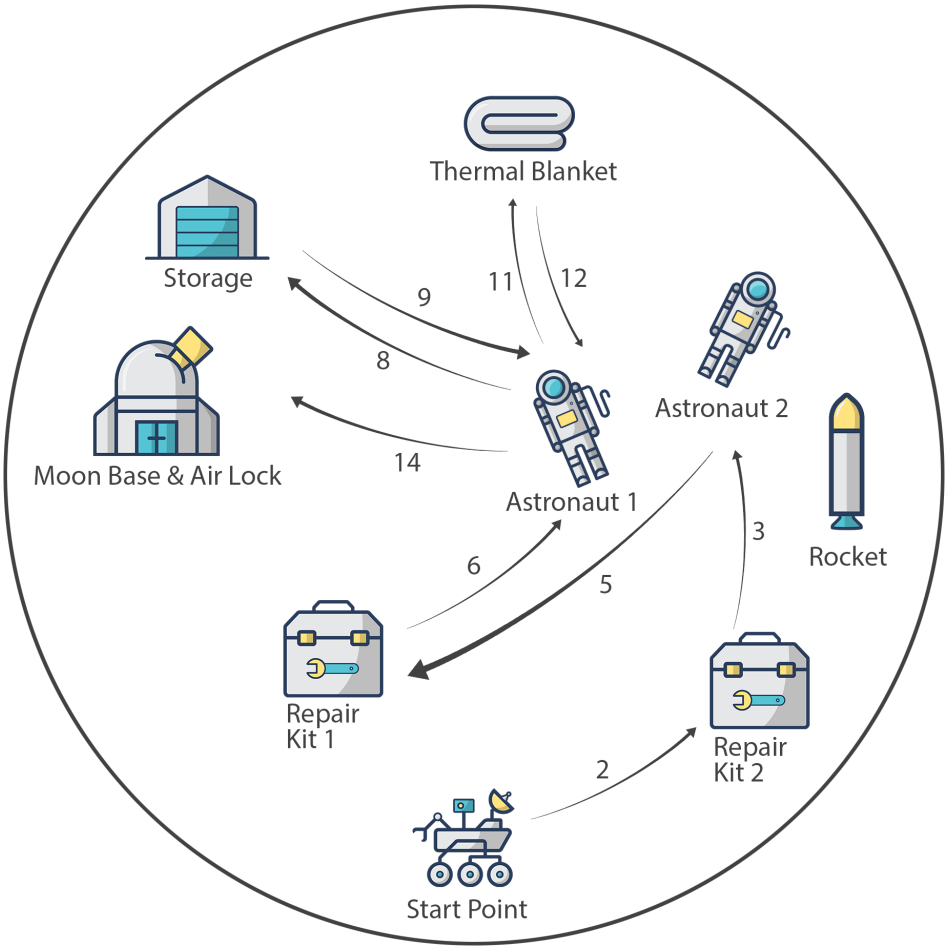

7.1.3.1. The Mission Steps

1. The **rover** is placed at the starting point.
2. One of the **repair kits** is looked for, found, and photographed.
3. The **repair kit** is delivered to the **astronaut** who needs it.
4. The **repair kit** is left in a certain area in front of the **astronaut**.
5. Another **repair kit** is looked for, found, and photographed.
6. The **repair kit** is delivered to the other **astronaut**.
7. The **repair kit** is left in a certain area in front of the **astronaut**.
8. The **rover** reaches the location of the **oxygen tube**.
9. The **oxygen tube** is taken and delivered to the **astronaut** who needs it.
10. The **oxygen tube** is left in front of the **astronaut** who needs it.
11. The **thermal blanket** is looked for, found, and photographed.
12. The **thermal blanket** is delivered to the **astronaut** who needs it.
13. The **thermal blanket** is draped over the **astronaut** who needs it.
14. The **rover** comes back to the **Moon Base**.

7.1.3.2. Details

1. The mission starts in the **airlock** of the **Moon Base**.
2. There are multiple wreck fields scattered all over the mission field. There are only two **repair kits** that are different colors in the field (one is orange, and the other one is blue). **Repair kits** that are partially visible from the outside are located in these wreck areas. To find the required equipment, the position of some objects in the mission field must be changed by the **rover**. The **repair kit** is photographed where it is located so that it can be seen.
    a. When the **repair kit** is found, the **rover** must photograph it. These photos are the evaluation criterion for the scoring in that step.
3. There are two motionless **astronauts** in the mission field. One of the **astronauts** wears an orange and the other a blue spacesuit. The location of the **astronauts** is predetermined, and the positions will be given to the teams as GPS coordinates. The **repair kit** is delivered to the **astronaut** whose suit is the same color as the **repair kit**. It does not matter which **astronaut** or **repair kit** the **rover** first reaches. The evaluation criteria is that the correct **repair kit** is delivered to the correct **astronaut** at the end of the mission.
    a. The **repair kit** delivered to the **astronaut** must be the same color as the **astronaut**'s suit.
    b. The **astronaut** is a plastic mannequin.
    c. The **rover** must go next to the **astronaut**.
4. There is a circle with a radius of 0.5 meter marked in front of the **astronaut**. It is expected that the **repair kit** is left in this area.
5. The 2nd detail applies here as well.
6. The 3rd detail applies here as well.
7. The 4th detail applies here as well.
8. The **oxygen tube** is located parallel to the ground in the predetermined storage area. It is possible to have more than one piece of equipment in the storage area and change their positions to reach the **oxygen tube**.
9. The **rover** must go to the **astronaut.**
10. In front of the **astronaut**, there is a circle of 1 meter diameter marked At the end of the mission, the **oxygen tube** must be inside the area, and must not touch the **rover**.
11. The unfolded **thermal blanket** is under the wreck and some of it is partially visible from the outside.
    a. When the **thermal blanket** is found, it must be photographed by the **rover**. The photo will be the evaluation criterion for the scoring in that step.
12. There is a circle with a radius of 1 meter around the position of the **astronaut**.
13. The **thermal blanket** must completely cover the **astronaut**.
14. The **rover** returns to the **airlock** of the **Moon Base** where it started the challenge, and must be completely inside the area.

7.1.3.3. For Autonomy

1. Locations of the start **point**, **Moon Base**, **center of the circle to put items in front of the astronauts, and storage area** will be shared with teams before the challenge.
2. There is a marker on the **repair kit**, this marker is in the **Technical Details** (section 9).
3. The color of the **repair kit**'s handle is different from the rest of the **repair kit**. Also, height from the **repair kit** will be shared with teams before the challenge via blueprint.
4. The **thermal blanket** is bigger than the size of the astronaut. Also, the **thermal blanket** can be observed on preparation day.
5. Dominant color of the astronaut's suit will be shared with teams before the challenge.
6. 9, 10, and 11 steps of the mission are not designed to be done autonomously**.** Teams should not try to complete these steps autonomously.

7.1.3.4. Notes

1. Details of the items are elaborated in the **Technical Details** section.

7.1.4. Mission 4: Presentation Mission

Time Limit: 15 minutes with the **juries**
Mission Field: Earth Hall

At this stage; teams present the data and photos they obtained from the **Mars field** and transferred using a **USB stick** in Mission 1, to reject or verify their scientific hypothesis and try to collect the points as indicated in the scores table.

Any other data that is not gathered by the team during the mission will not be accepted. In addition, team members should interpret their data in the presentation.

7.1.4.1. The Mission Steps

1. Selection of the starting point of the **rover** in Mission 1 is explained.
2. Photos taken in Mission 1 are shown.
3. The sampling location is indicated, and the photographs taken while sampling are shown.
4. The results of the sample examinations are explained.
5. Stratigraphy of the region should be presented.
6. The results based on the sensors should be explained.
7. Bonuses gathered during the missions should be presented.

7.1.4.2. Details

1. A scientific question consistent with the hypothesis as indicated in the previously submitted report is expected to be investigated.

2. The geology of the area is specified using photographs. Observed geomorphological structures are interpreted.
3. The sample location must be consistent with the scientific hypothesis. It is also important that the photographs taken from the sampling area must be scaled.
4. Laboratory results of the collected sample should be reported.
5. The relative age relationships of morphological structures are explained.
6. Each sensor should be explained in terms of why they have been used. Results should be shown.

7.2. Side Missions

7.2.1. Challenge to Shine

Time limit: 10 minutes with each **jury**
Mission Field: Earth Hall

This small side challenge is a presentation challenge to be made to experts in their fields. The presentations made in this challenge are evaluated separately and not be included in the general challenge score. The fields of the experts are geology, biology, autonomous driving and control, **panel** manipulation, driving in difficult terrain, and team structure. Team members will have 10 minutes to present their approach to the stated fields during this challenging process to the **juries** in different rooms. The presentations will be evaluated, and the **juries** will choose the winner of each field. Prizes will be given to the winning teams. Each field can only have one winner.

7.2.2. Mini-Challenges

During challenge days, there will be mini-challenges which are not a part of the main challenge. These challenges are a set of games and mostly require rover-teammate interaction. All of the winners will get special awards. Some of the planned mini-missions are stated in this section. The ARC Comittee has all rights to make changes to mini-challenges until the competition day. Mini-challenge winners will be awarded in all categories.

7.2.2.1 Tug of Challenge

Two teams play tug-of-war, with only team members or only rovers. Rovers can pull the rope tied.

7.2.2.2 Dance Challenge + Victoria's Rover

Teams decorate their rovers. Rover takes a tour on the runway. After the tour, the rover performs a dance choreography with at least two members of the team. It is up to the imagination of the team members. Traditional clothing and dances are encouraged.

7.2.2.3 Roverjenga

Rovers and optionally, team-mates will play with Rover-sized Jenga pieces. It can also be played by the participants, optionally. They should be careful and precise so as not to drop the blocks.

7.2.2.4 Egg and Rover Challenge

The rovers will carry a special space egg on a special spoon without cracking the egg. The important thing is balance of the rover; drivetrain and robotic arm capabilities will be challenged.

7.2.2.5 Roverbowling

Rovers will roll the bowling balls to hit custom made pins. It is important to aim properly to hit the target.

7.2.2.6 Rover's Punch

Rovers try to break the 2 cm thick plank, which is placed on two supports. The method to break the plank is decided by the team. With each successful step, the number of planks increases. Rovers use their robotic arm powers.

7.2.2.7 Ring Challenge

Rovers try to pass a ring through a specially made metal pipe. Rover's arm should not be shaken in order not to touch the pipe.

7.2.2.8 Demon's Chess

The chessboard and pieces for the rovers to play with are prepared. Chess is played either by participants or by rovers.

7.2.2.9 Roverelay

2 people from each team and their rover play the relay race. The race is held for a total of 250 meters. The first team member should achieve the first 100 meters. Then the rover moves for 50 meters. Finally, the second team member finishes the last 100 meters. This is a team game, so no team member or rover should be left behind.

7.2.2.10 Roverpong

Rovers try to score points by inserting balls of certain sizes from a certain distance into boxes/cups/baskets that have certain points and are positioned at different distances. The important thing is to shoot properly into the boxes/cups/baskets.

7.2.2.11 Squidrover

It is a "Red light-green light" game. When the seeker turns around, the red light turns on and the moving competitor is eliminated. 2 team members from each team and the rover participate in this competition. The movement precision of the rovers is important.

7.2.2.12 Nascarover

A track with curves and different terrain conditions are prepared and rovers race on this track (Our competition area can be turned into a track.). Rovers should have good terrain control.

7.2.2.13 Cornerover

If there are x number of rovers to compete, there will be x-1 number of corners. When the whistle blows, all the rovers try to get into a corner. The one left out is eliminated (like a chair grabbing game). The speed of the rovers will be in the foreground.

7.2.2.14 Soccerover

Rovers play football using huge goals and the ball. The speed and field dominance of the rovers are important.

8. Score Tables

Challenge scores are given in the table below. Teams are evaluated with the sum of the points they get from all missions at the end of the challenge. The top three teams that get the maximum overall points will be selected as winners, and awarded respectively.

8.1. Design Report

Design Report scores will not affect mission scores but affect the elimination process to select the finalist teams. The scoring will be conducted by the following table.

No	Title	Description	Detail	Score
1	Team Info	Team Name	Name of the team and if applied, name of the rover.	1
2		Contact	Contact information and social media links of the team	1
3		Academic Institution	Name and address of the affiliated academic institution.	1
4		Academic Consultant	Name, affiliated academic institution, and contact information of academic consultant.	1
5		History of the team	A paragraph of team history including foundation date, competitions experience.	5
6		Active Members List	A table of active members including the following information: Name (or initial letters), University Major and duty in the team.	2
7		Team Photo	A photo/screenshot of the whole or part of the team.	1
8	Management	Work Calendar	Explain the work on the project by a Gantt chart. Include 10-15 items in the Gantt chart.	10
9		Team Formation	How is the team workforce structured? (2-3 sentences) Include a graphic to explain the structure as well.	5
10		Workplace	How does the team design, build and test the rover physically? Explain the workplace. (2-4 sentences) Include a photo/screenshot of the workplace.	3
11		Funding	How are the funds of the project at the time of submission of this document? (2-4 sentences)	2
12			How much spending is expected for the development costs? How much spending is expected for the travel costs? (2-4 sentences)	2
13			What is the team's plan in an insufficient funding situation by the competition date? (2-4 sentences)	2
14		Logistics	What is the team's plan to package and bring the rover to the competition site by July? (4-6 sentences)	4
15	Rover Design	Mobility system	What is used? Describe the system (3-5 sentences)	2
16			Why is the system chosen? What are the considerations? What are weaknesses and strengths? (3-5 sentences)	2
17			Unique points and inspirations (3-5 sentences)	2

18			Visuals of the system (2 photo/screenshots)	2
19			Technical Specifications including mass and size (3-5 sentences)	2
20			Discuss the system's adequacy for its role in competition missions. (3-5 sentences)	2
21		Electronics and power system	What is used? Describe the system (3-5 sentences)	2
22			Why is the system chosen? What are the considerations? What are weaknesses and strengths? (3-5 sentences)	2
23			Unique points and inspirations (3-5 sentences)	2
24			Visuals of the system (2 photo/screenshots)	2
25			Technical Specifications including mass and battery duration (3-5 sentences)	2
26			Discuss system's adequacy for its role in competition missions. (3-5 sentences)	2
27		Manipulation system	What is used? Describe the system (3-5 sentences)	2
28			Why is the system chosen? What are the considerations? What are weaknesses and strengths? (3-5 sentences)	2
29			Unique points and inspirations (3-5 sentences)	2
30			Visuals of the system (2 photo/screenshots)	2
31			Technical Specifications including mass, max payload, and size (3-5 sentences)	2
32			Discuss system's adequacy for its role in competition missions. (3-5 sentences)	2
33		Science Payload	What is used? Describe the system (3-5 sentences)	2
34			Why is the system chosen? What are the considerations? What are weaknesses and strengths? (3-5 sentences)	2
35			Unique points and inspirations (3-5 sentences)	2
36			Visuals of the system (2 photo/screenshots)	2
37			Technical Specifications including mass and sensors (3-5 sentences)	2
38			Discuss system's adequacy for its role in competition missions. (3-5 sentences)	2
39		Ground station equipment and communication system	What is used? Describe the system. (3-5 sentences)	2
40			Why is the system chosen? What are the considerations? What are weaknesses and strengths? (3-5 sentences)	2
41			Unique points and inspirations (3-5 sentences)	2
42			Visuals of the system (2 photo/screenshots)	2
43			Technical Specifications including resilience to noise and communication range (3-5 sentences)	2
44			Discuss system's adequacy for its role in competition missions. (3-5 sentences)	2

8.2. Video Presentation

Video Presentation scores will not affect mission scores but affect the elimination process to select the finalist teams. The scoring will be conducted by the following table.

No	Title	Description	Detail	Score
1	Team Info	Team Name	Name of the team and if applied, name of the rover.	1
2		Academic Institution	Name of the affiliated academic institution.	1
3		History of the team	The team's history including foundation date, attended competitions and experience.	3
4		Team Photo	A photo/screenshot of the whole or part of the team.	3
5	Management	Workplace	How does the team design, build and test the rover physically? Explain the workplace.	2
6	Rover Design	Mobility system	What is used? Describe the system.	1
7			Technical Specifications including mass and size.	1
8			Why is the system chosen? What are the considerations?	1
9			Visuals of the system to show mechanisms.	3
10			Demonstration of the system with ARC'22 mission objectives in mind.	8
11		Electronics and power system	What is used? Describe the system.	1
12			Technical Specifications including mass and size.	1
13			Why is the system chosen? What are the considerations?	1
14			Visuals of the system to show mechanisms.	3
15			Demonstration of the system with ARC'22 mission objectives in mind.	8
16		Manipulation system	What is used? Describe the system.	1
17			Technical Specifications including mass and size.	1
18			Why is the system chosen? What are the considerations?	1
19			Visuals of the system to show mechanisms.	3
20			Demonstration of the system with ARC'22 mission objectives in mind.	8
21		Science Payload	What is used? Describe the system.	1
22			Technical Specifications including mass and size.	1
23			Why is the system chosen? What are the considerations?	1
24			Visuals of the system to show mechanisms.	3
25			Demonstration of the system with ARC'22 mission objectives in mind.	8
26		Ground station equipment and communication	What is used? Describe the system.	1
27			Technical Specifications including mass and size.	1

28		system	Why is the system chosen? What are the considerations?	1
29			Visuals of the system to show mechanisms.	3
30			Demonstration of the system with ARC'22 mission objectives in mind.	8
31		Whole Rover	Demonstration of the system with ARC'22 mission objectives in mind.	10
32	Video Clarity		Quality of the content and presentation	10
TOTAL				**100**

8.3. Grading on a Curve

The competition includes Grading on a Curve system to reward unparalleled performances of teams.

1. Grading on a curve is only applied for the mission scores Mission 1, Mission 2, and Mission 3.
2. If the teams are eligible to get a point from one of the mission steps, the mission score of that step may be influenced by the Grading on a Curve.
3. Grading on a Curve is only applied if the number of the teams that failed is higher than the number of the teams that succeeded in the step.
4. Grading on a Curve is applied only for the mission score and **not** to the bonus score.
5. The procedure for the Grading on a Curve is the following:
   The number of teams that failed in the relevant step is divided by half of the number of teams. After that, this number is multiplied by the score which is indicated in the score table.
6. The formula of the Grading on a Curve:
   $$if\ x > (b/2),\ a\ = z\ *\ x\ /\ (b/2)$$
   a is graded on a curve value of the score
   b is the number of teams
   x is the number of the teams that failed in the step
   z is the score which was gained based on the score table

8.4. Mission 1 (Mars Field)

Mission 1 will be scored according to the table below.

No	Score Parameter	Mission Score	Explanation	Bonus Score	Bonus Explanation
1.1	Taking the sample	10	The sample must be taken from a depth of at least 5 centimeters.	1	for each extra number of samples
1.2		5	The sample must be taken at least 10 grams.	1	for each extra gram of samples

1.3		5	The sample must be placed in a suitable container that prevents contamination.	1	for each extra number of samples
2	Getting to the Mars Base	2	The rover has to arrive at the location of the Mars Base.	5	If the mission step is completed autonomously.
3	Entering the airlock	5	It must fit snugly in the airlock. No part of it must come into contact with the airlock.	10	If the mission step is completed autonomously.
4	Getting to the trailer	3	The position of the trailer is indicated by a circle with a radius of 1 meter. Teams must take the rover in this circle.	5	If the mission step is completed autonomously.
5	Transporting the fuel filling equipment to the side of the rocket with the help of a trailer	5	There is a 2 meters diameter circle around the coordinate of the rocket given to the teams. The rover must reach this area by carrying the trailer and settling in this area with the trailer.	7	If the mission step is completed autonomously.
6	Attaching the fuel pipes to the rocket	10	The fuel pipe on the trailer must be attached to the corresponding area on the rocket. The fuel pipe must remain stationary so that it does not fall.	7	If the mission step is completed autonomously.
7	Turning on the fuel valve	8	The valve of the fuel filling equipment on the trailer must be fully turned on.	7	If the mission step is completed autonomously.
8	Starting the refueling process by manipulating panel	12	The panel must be manipulated by entering key combinations that will initiate refueling. (Details are in **Technical Details** section)	15	If the mission step is completed autonomously.
9	Returning to the Mars Base	2	The rover has to arrive at the location of the Mars Base.	5	If the mission step is completed autonomously.
10	Taking the USB stick from the Mars Base	5	The USB stick, which is attached to the panel outside the Mars Base, must be taken with the help of the robotic arm. The robotic arm and the USB stick must be 10 centimeters away from the panel.	5	If the mission step is completed autonomously.
11	Retrieval of scientific samples from the airlock	5	The scientific sample box left on the ground in the airlock must be taken and removed at least 1 meter from the airlock.	7	If the mission step is completed autonomously.
12	Returning to the rocket	2	The position of the rocket is indicated by a circle with a radius of 1 meter. Teams must take the rover to this circle by centering on the given GPS coordinate.	5	If the mission step is completed autonomously.
13	Opening the payload cover of the rocket	10	The payload cover on the rocket must be opened. Bonus scores will be received if the mission is completed autonomously. (Detailed file regarding the dimensions of the cover and its position on the rocket will be submitted to the teams.)	7	If the mission step is completed autonomously.
14	Placing scientific samples in the payload section	10	The scientific sample box must not interfere with the closing of the lid in the position where it is placed.	7	If the mission step is completed autonomously.

15	Closing the payload cover of the rocket	5	The payload cover must be fully closed.	3	If the mission step is completed autonomously.
16	Inserting the USB stick into the relevant area on the panel	10	The USB stick must be inserted into the relevant area on the panel. (The USB stick slot location information will be presented to the teams)	7	If the mission step is completed autonomously.
17	Removing the USB stick from panel	5	After transferring the information, the USB stick must be removed. (The time required for the transfer is specified in the relevant section of the Rules.)	5	If the mission step is completed autonomously.
18	Turning off the fuel valve	8	The valve of the fuel filling equipment on the trailer must be completely turned off.	7	If the mission step is completed autonomously.
19	Removing the fuel pipes from the rocket	5	The fuel filler pipe on the trailer must be removed from the corresponding area on the rocket.	3	If the mission step is completed autonomously.
20	Moving the trailer away from the rocket	5	The trailer must be transported at least 5 meters from the rocket.	3	If the mission step is completed autonomously.
21	Starting the engines	15	The panel must be manipulated by entering key combinations that will start the motors. (For combinations, see the relevant section of the rules file)	25	If the mission step is completed autonomously.
22	Returning to the airlock	2	The **rover** must be placed in the designated airlock area with no part of it protruding.	5	If the mission step is completed autonomously.

No	Penalties	Mission Score	Explanation
1	Damage to the panel.	-%10	Scores are reduced and a spare panel is given.
2	Damage to the fuel pipe.	-%10	Scores are reduced and a spare fuel pipe is awarded.
3	Damage to the USB stick.	-%10	Scores are reduced and a spare USB stick is given.
4	The rover crashes into the Panel.	-%5	Scores are reduced. If there is no damage, it is taken back and continued.

8.5. Mission 2 (Moon Field)

Mission 2 will be scored according to the table below.

No	Score Parameter	Mission Score	Explanation	Bonus Score	Bonus Explanation
1	Getting to point B on clear road	5	The rover must go to point B.	-	-
2	Navigating around the first obstacle	8	The rover must navigate around the first obstacle to go to point C.	-	-
3	Entering the wreck field	5	The rover must go into the wreck field whose radius is 8 meters and center is point D.	-	-
4	Stopping next to the first astronaut	10	For the first astronaut to be detected, the rover must stop next to the astronaut.	-	-
5	Taking a picture of the first astronaut and sending it to the Moon Base	5	The photograph must include the astronaut's head in the frame. The photograph must be sent to the **Moon Base** to evaluate.	-	-
6	Sending name and health condition data accessed from the astronaut's spacesuit to the Moon Base.	10	Data accessed via Bluetooth must be sent to the **Moon Base** to evaluate. The total score for each of the names and health statuses will be split in half.	-	-
7	Stopping next to the second astronaut	10	For the second astronaut to be detected, the rover must stop next to the astronaut.	-	-
8	Taking a picture of the second astronaut and sending it to the Moon Base	5	The photograph must include the astronaut's head in the frame. The photograph must be sent to the **Moon Base** to evaluate.	-	-
9	Sending name and health condition data accessed from the astronaut to the Moon Base.	10	Data accessed via Bluetooth must be sent to the **Moon Base** to evaluate. The total score for each of the names and health statuses will be split in half.	-	-
10	Traversing out of the crater	10	The rover must traverse out of the crater to continue the mission.	-	-
11	Navigating around the second obstacle	7	The rover must navigate around the second obstacle to go to point F.	-	-
12	Getting in front of the airlock	5	For the rover to enter the airlock, it must go to point A in front of the airlock.	-	-

13	Getting in through the airlock	10	The rover must enter the airlock with the help of the markers on the Moon Base.	-	-
14	Doing all steps of the mission in a single attempt			15	The rover must not repeat any steps of the mission.

No	Penalties	Mission Score	Explanation
1	Detection of the rover being remotely controlled during the mission	-%100	No scores can be taken from the mission.
2	Damage to objects on the field	-%10	Resulting in a 10% deduction from the team's total Mission 2 scores for each object damaged.
3	Touching astronauts	-%5	Result in a 5% deduction from the team's total Mission 2 scores for each touching.
4	Any part of the rover going out of the field	-%5	Scores are broken and continue from the last successful step of the mission.
5	Shutting down the rover with communication	-%5	Because an emergency has occurred that the red button could not be reached.
6	Repetition of the mission step	-%2	Each repetition results in a 2% deduction from the team's total Mission 2 scores.

8.6. Mission 3 (Moon Field)

No	Score Parameter	Mission Score	Explanation	Bonus Scores	Bonus Explanation
1	Finding and taking picture of the first repair kit	5	One of the orange and blue repair kits at the wreck site must be found. Some items in the wreck site may need to be lifted with a robotic arm to find the repair kits. The repair kit must be photographed clearly where it is located.	10	If the mission step is completed autonomously.

2	Delivering the first repair kit to the astronaut	5	The position of the astronaut is indicated by a circle with a radius of 1 meter. Teams must take the rover to this circle by taking the given GPS coordinate as their center. The repair kit must be delivered to the astronaut wearing the same colored suit as the repair kit.	10	If the mission step is completed autonomously.
3	Dropping the first repair kit in the chosen area	5	There is a circle with a radius of 0.5 meters marked in front of the astronaut. At the end of the mission, the repair kit must be in that circle.	3	If the mission step is completed autonomously.
4	Finding and taking picture of the second repair kit	5	One of the yellow or red repair kits at the wreck site must be found. Some items in the wreck site may need to be lifted with a robotic arm to find the repair kits. The repair kit must be photographed clearly where it is located.	10	If the mission step is completed autonomously.
5	Delivering the second repair kit to the astronaut	5	The position of the astronaut is indicated by a circle with a radius of 1 meter. Teams must take the rover to this circle by taking the given GPS coordinate as their center. The repair kit must be delivered to the astronaut wearing the same colored suit as the repair kit.	10	If the mission step is completed autonomously.
6	Dropping the second repair kit in the chosen area	5	There is a circle with a radius of 0.5 meters marked in front of the astronaut. The repair kit must be placed inside this circle.	3	If the mission step is completed autonomously.
7	Moving to the position of the oxygen tube	5	The position of the storage is indicated by a circle with a radius of 1 meter. Teams must take the rover to this circle by taking the given GPS coordinate as their center.	-	-
8	Taking the oxygen tube	5	Other equipment may need to be relocated to reach the oxygen tube in the storage area. The oxygen tube must be lifted 30 centimeters from the ground with the help of the robotic arm.	-	-
9	Delivering the oxygen tube to the astronaut	10	The position of the astronaut is indicated by a circle with a radius of 1 meter. Teams must take the rover to this circle by taking the	-	-

			given GPS coordinate as their center.		
10	Dropping the oxygen tube in the chosen area	5	There is a circle with a radius of 0.5 meters marked in front of the astronaut. At the end of the mission, the oxygen tube must be in that circle.	-	-
11	Finding the thermal blanket	5	Thermal blankets at the wreck site must be found. A thermal blanket must be photographed clearly where it is located.	-	-
12	Delivering the thermal blanket to the astronaut	5	The position of the astronaut is indicated by a circle with a radius of 1 meter. Teams must take the rover to this circle by taking the given GPS coordinate as their center.	5	If the mission step is completed autonomously.
13	Covering the thermal blanket over the astronaut	10	Thermal blankets must be completely covered by the astronaut. Scoring will be proportional to the astronauts' covered surface.	20	If the mission step is completed autonomously.
14	Returning to the Moon Base.	5	The rover must be placed in the airlock at the Moon Base with no part of it protruding.	5	If the mission step is completed autonomously.

No	Penalties	Mission Score	Explanation
1	Damage to any equipment on the field	-%5	In case of damage to equipment (oxygen tube, repair kit, thermal blanket) scores are broken, and if the equipment cannot be used, new equipment is given to the teams.
2	Damage to an astronaut	-%10	In case of any damage to the astronaut on the field, scores are deducted.

8.7. Mission 4 (Earth Hall)

No	Score Parameter	Mission Score (Main score+Bonus)	Explanation	Bonus Scores	Bonus Explanation
1	Suitability of the chosen sampling area to verify the hypothesis	15	It is expected that the selected area is consistent with the report given before the challenge.	-	-

2	Presenting the panoramic photographs of the area	5	The photographs must be in the USB stick loaded to the rocket by the rover in Mission 1.	-	-
3	Explaining the panoramic photographs of the area	5	The geomorphology of the region must be interpreted from the photograph.	-	-
4	Presenting the photograph taken during sample collection	10	The photograph must be scaled. It must be in the USB stick put into the rocket by the rover in Mission 1.	-	-
5	Explaining the sampling site based on hypothesis	10	The selected sampling site must be consistent with the scientific hypothesis.	-	-
6	Identification of the sample given by the juries	10	The physical properties and significance of the sample for the hypothesis must be described.	-	-
7	Explaining the appropriateness of the experiments performed on the sample given by the juries based on the hypothesis	10	Each experiment performed to test the scientific hypothesis has extra scores. If the experimental methodology is inconsistent with the hypothesis, no scores can be obtained.	-	-
8	Interpreting the results of the experiments	10	The result of the experiment must be explained in the context of the scientific hypothesis. Rejecting or confirming the hypothesis must be explained with their reasons.	-	-
9	Presenting the stratigraphic photographs	5	The photograph must be in the USB stick put into the rocket by the rover in Mission 1.	-	-
10	Explaining the stratigraphic photographs	10	Geomorphological structures in the region must be evaluated in terms of time relations. The geological history of the region must be explained using photographs of the cross-cutting structures. To define the relative age of the unit, in which the sample was taken, it should be compared with the other units in the area. The photo must have been archived in the USB stick put into the rocket during Mission 1.	-	-

11	Demonstrating the data of the sensors and additional sensor measurements	5	The sensor readings must be in the USB stick obtained during Mission 1. Each additional sensor added to the vehicle gives extra scores when the reasons for the addition are explained during the presentation and are found to be compatible with the hypothesis by the juries.	1	for each extra sensors

8.8. General Scoring for Missions 1 to 3

1. Intervention
Teams can make a maximum of 3 interventions.
An intervention deducts 15% scores from the mission performed.
Two interventions deduct 40% scores from the mission performed.
Three intervention deducts 70% scores from the mission performed.
Time elapsed during the intervention is deducted from duty time.
Pressing the emergency button is considered an intervention.
In case of a security problem, if the emergency button is pressed, the team is deemed to have intervened. (going out of the field etc.)
2. Skipping
In the event of a skipping, touching the rover will be considered an intervention.
Skipping does not stop the timer, the timer continues to run.

9. Technical Details

9.1. Markers

Markers will be used to locate items or positions on site.

1. M1

(The marker on the first astronaut)

2. M2

(The marker on the second astronaut)

3. M3

(The marker outside of the Airlocks)

4. M4

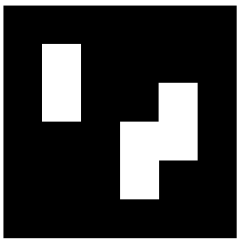

(The marker inside of the Airlocks)

5. M5

(The marker being on the panel)

6. M6

(The marker being on the first repair kit)

7. M7

(The marker being on the second repair kit)

8. M8

(The marker being on the rocket)

9. M9

(The marker being on the trailer)

9.2. Bluetooth Format

1. The data is in the name of the bluetooth device; therefore, the rover does not need to pair the device.
2. Different devices are used for different teams, and Bluetooth MAC addresses of the devices are shared with teams before the mission to read data from the correct device.
3. The name of the astronauts consist of 5 characters which are on the ASCII Table
4. The health condition is a number between 0-9
5. The device name is **name:name_of_the_astronaut,health:health_condition**
6. **Example of the device name: name:aysel,health:9**

9.3. Drawings

All dimensions on the drawings can change until the challenge day. Exact blueprints will be shared with the teams in the "Final Refinement" document that will be published at 01.07.2022 on ARC website.

9.3.1. Panel A

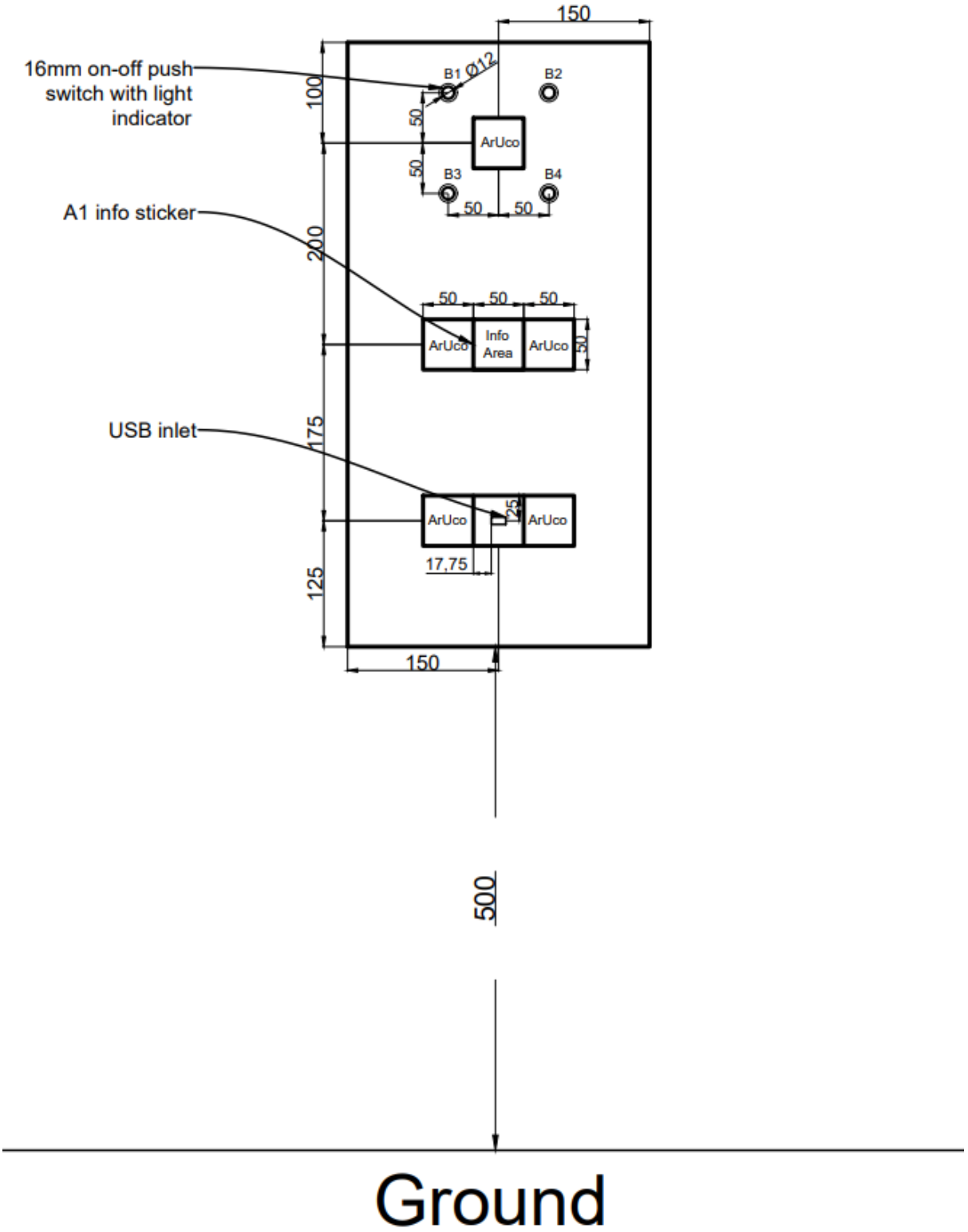

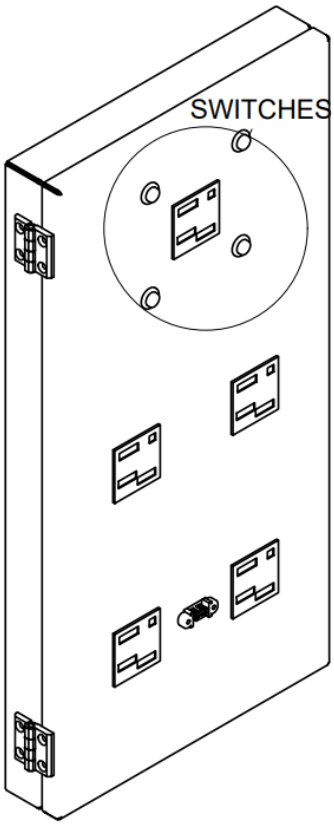

SWITCHES (1:2)

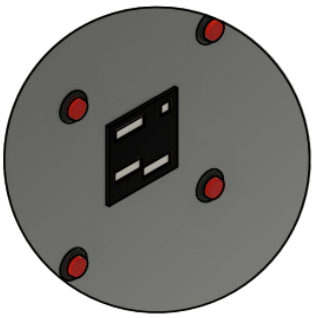

2-1-4-3

Sample A1 info area label.

9.3.2. Panel B

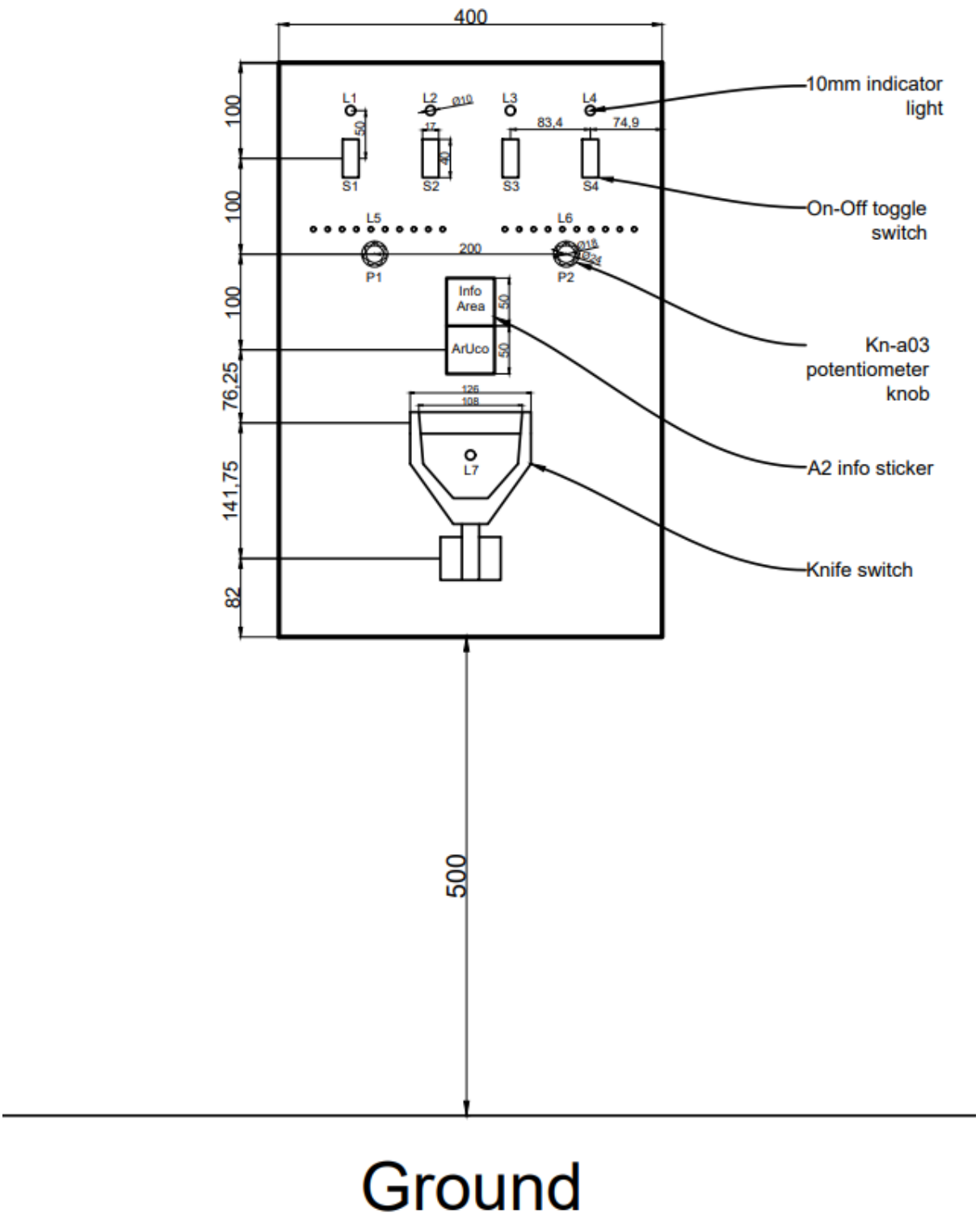

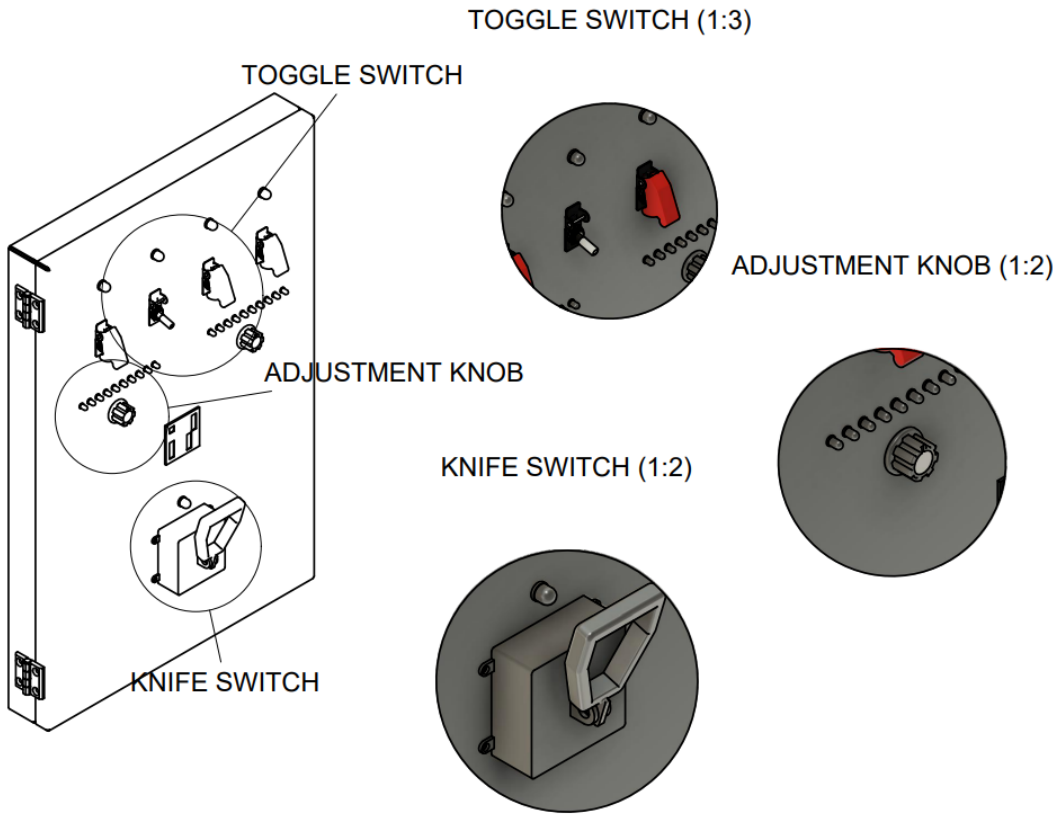

9.3.2.1. Details:

1. Every switch has a light indicator to highlight the "on" stage.
2. P1 and P2 switches have 10 LEDs on top of each. Every 36° turning motion lights one of the 10 LEDs in a row. (Which means in the 0° stage none of the lights are on while in 360° all of the ten LEDs will be on.) Teams will be required to turn P1 and P2 switches till the intended amount of LEDs are “on” stage.
3. A2 info area will contain a 5cmx5cm label which will contain information about intended light count.

P1-2\P2-9

Sample A2 info area label.

9.3.3. Panel C

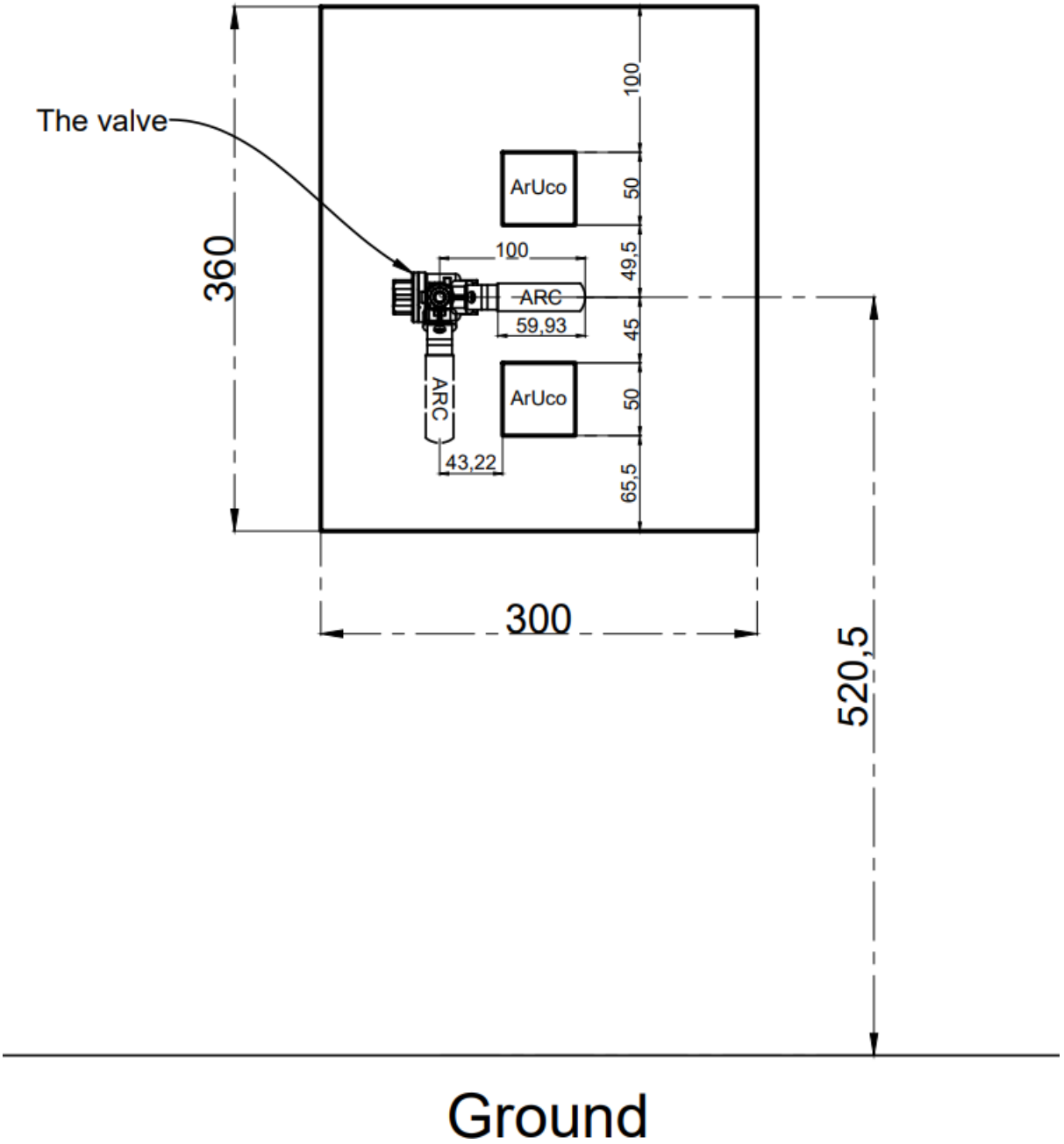

9.3.4. Panel D

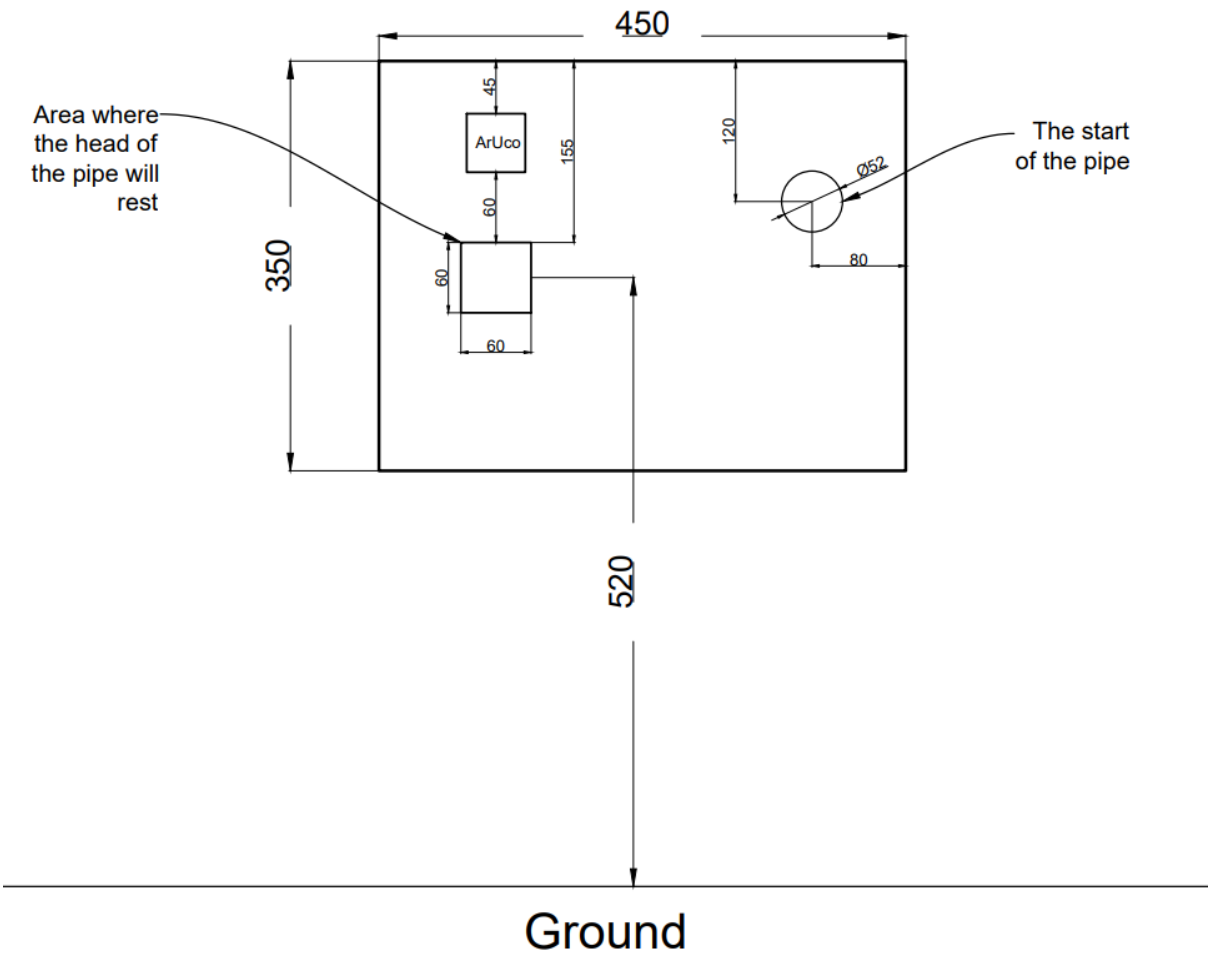

9.3.5. Panel E

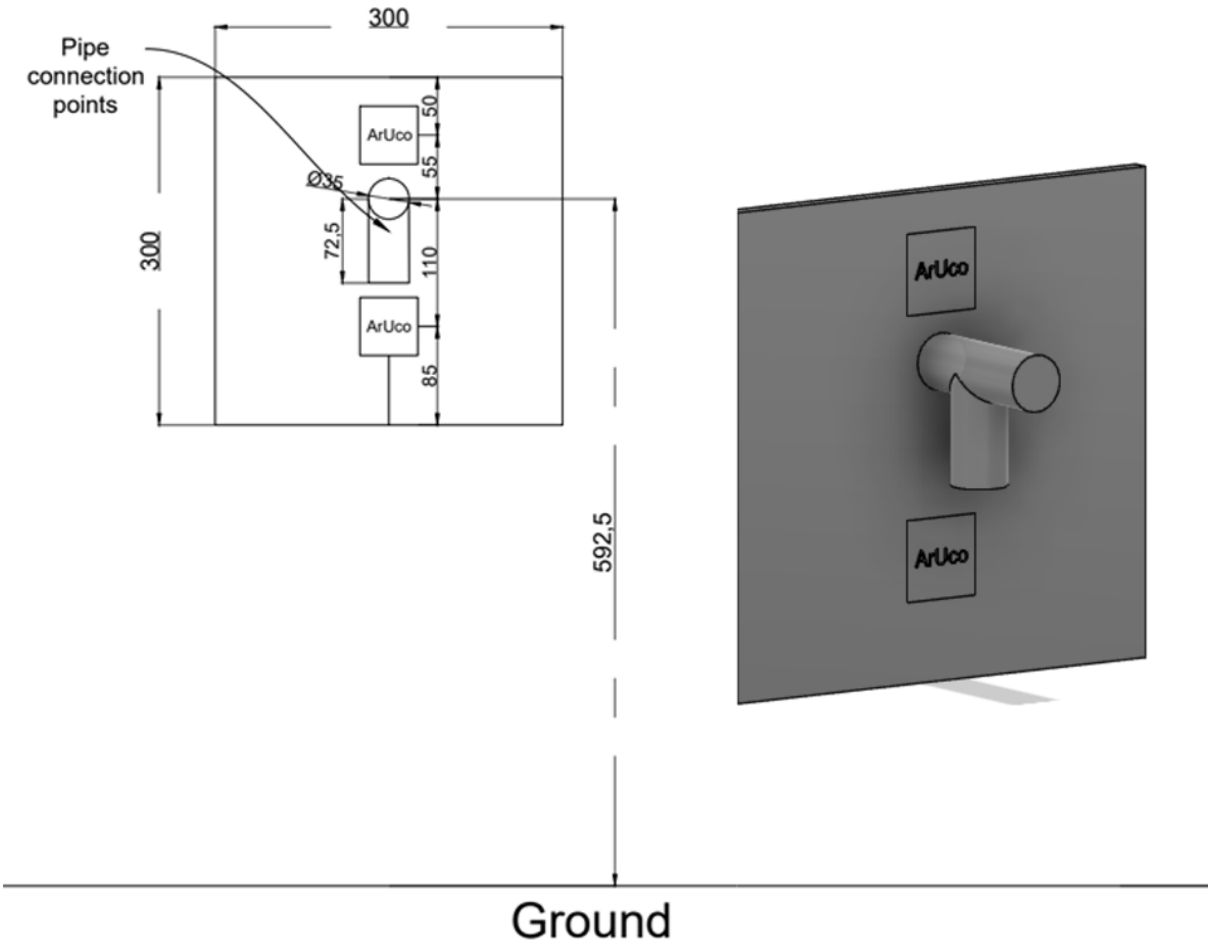

9.3.6. Refueling Equipment

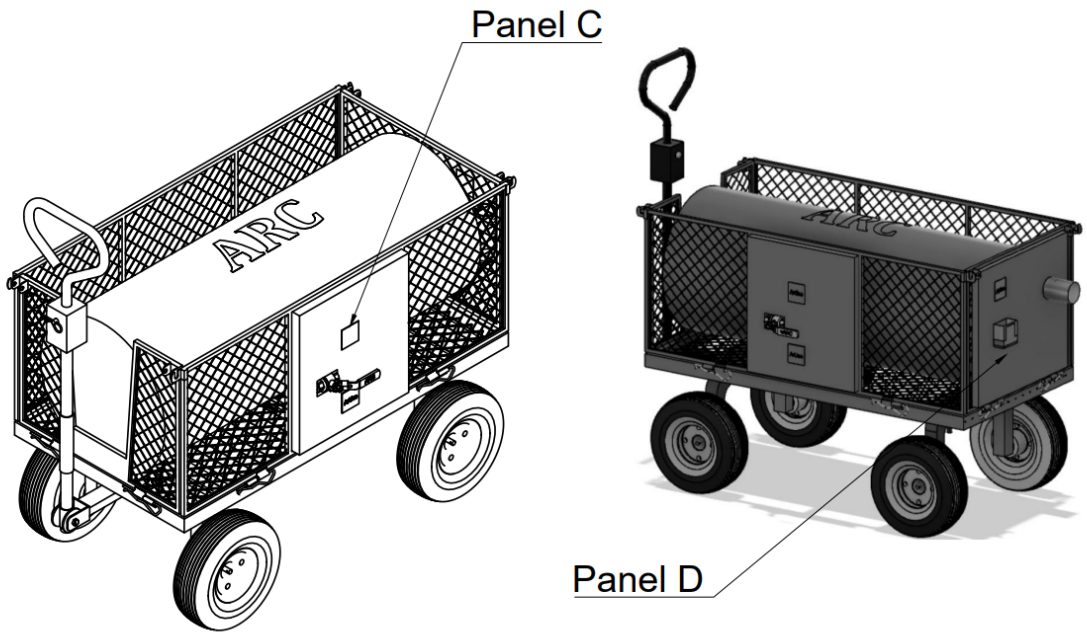

9.3.6.1. Details:

1. Dimensions(Length * Width * Height)=1100 * 505 * 495 mm
2. Dimensions with Carrying Handle (Length * Width * Height): 1100 * 505 * 940 mm
3. Weight: 20 kg

9.3.7. Oxygen Tube

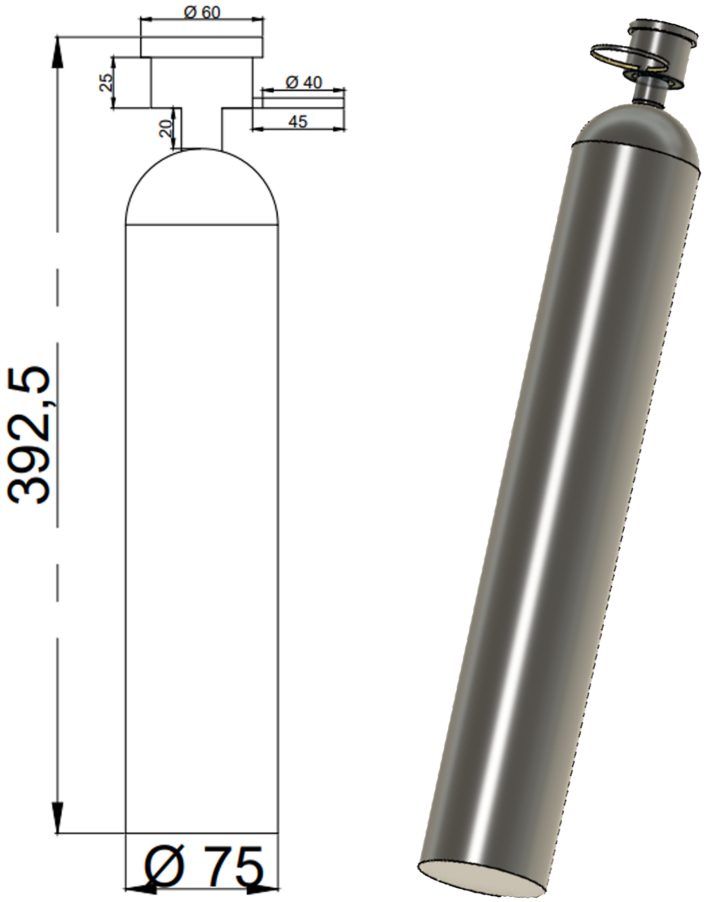

9.3.7.1. Details:

1. Weight: 2 kg

9.3.8. Repair kit

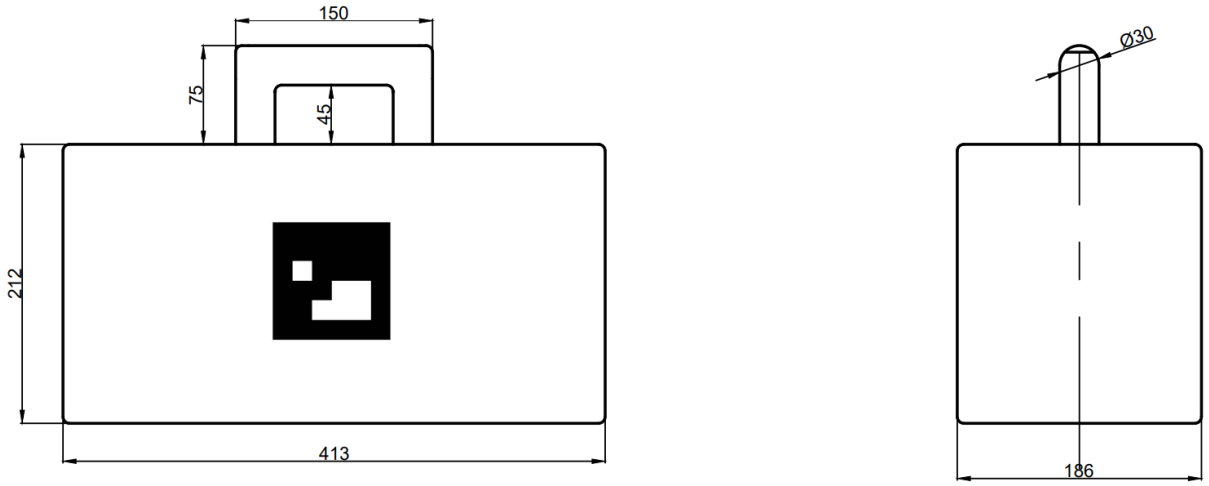

9.3.8.1. Details:

1. Weight: 3.5 kg

9.3.9. Payload Bay